BulletCam HL

Wired AI-powered security IP camera with hybrid illumination, TrueWDR, microphone, and PoE/12 V. For outdoor and indoor use.

IR · WL · IK08 · IP65 · True WDR · SD



ONVIF · NDAA Compliant

Product versions

BulletCam HL (5 Mp/2.8 mm)

- 5 MP
- ƒ/2.8 mm (fixed)
- up to 2880 × 1620 px
- 25 fps (3K UHD)
- 100°–110°

BulletCam HL (8 Mp/2.8 mm)

- 8 MP
- ƒ/2.8 mm (fixed)
- up to 3840 × 2160 px
- 20 fps (4K UHD)
- 100°–110°

BulletCam HL (5 Mp/4 mm)

- 5 MP
- ƒ/4 mm (fixed)
- up to 2880 × 1620 px
- 25 fps (3K UHD)
- 75°–85°

BulletCam HL (8 Mp/4 mm)

- 8 MP
- ƒ/4 mm (fixed)
- up to 3840 × 2160 px
- 20 fps (4K UHD)
- 75°–85°

Clear image with full-color details, day and night

Hybrid illumination in BulletCam HL cameras automatically switches between infrared and white light based on object recognition or motion detection. This ensures high image quality in low-light conditions and at night. The feature provides full-color footage for better object recognition and helps deter intruders when white light is activated.

up to 50 m (164 ft)
IR illumination range

up to 50 m (164 ft)
White light illumination range

Uncompromising security and privacy

- Passwordless camera authentication via mutual TLS (mTLS) handshake
- TLS-encrypted video streams
- User-controlled access to video content
- Secure video export with digital signature verification
- Multi-tiered account protection: passcodes, biometrics, and two-factor authentication
- Session control for additional account security
- NDAA-compliant components and protocols

Seamless user experience

- AI-powered object recognition: humans, vehicles, and pets[1]
- High-resolution visual verification of alarms via video scenarios[1]
- Instant transition from notifications to on-site video recordings[1]
- Camera synchronization with security system modes
- Real-time monitoring with a customizable video wall
- True WDR (Wide Dynamic Range) for superior image quality

Smooth archive navigation

- Proprietary JetSparrow technology for instant, secure video streaming and smooth archive navigation
- Instant access to live view
- Fast archive navigation using event timeline, calendar view, and search filters
- Dual streams for instant preview and optimized bandwidth usage
- Quick video clip export in just a few clicks

Easy installation and maintenance

- Adding to an Ajax system via QR code
- Remote control and configuration via Ajax apps
- Support for ONVIF/RTSP authorization
- Motion detection zone configuration via Ajax mobile and desktop apps
- Real-time system health monitoring with automatic state checks

Flexible video surveillance for any scale and scenario

BulletCam HL cameras use Ajax Cloud to transmit system events and JetSparrow technology for fast, secure peer-to-peer video data transmission. With AI-powered object recognition, the camera can identify humans, vehicles, and pets, ensuring only relevant activity is recorded. Strict event filtering helps save storage space and streamlines archive navigation.

Hybrid illumination provides full-color image quality day and night. The camera can be activated depending on the security mode, making video surveillance precisely selective and effective.

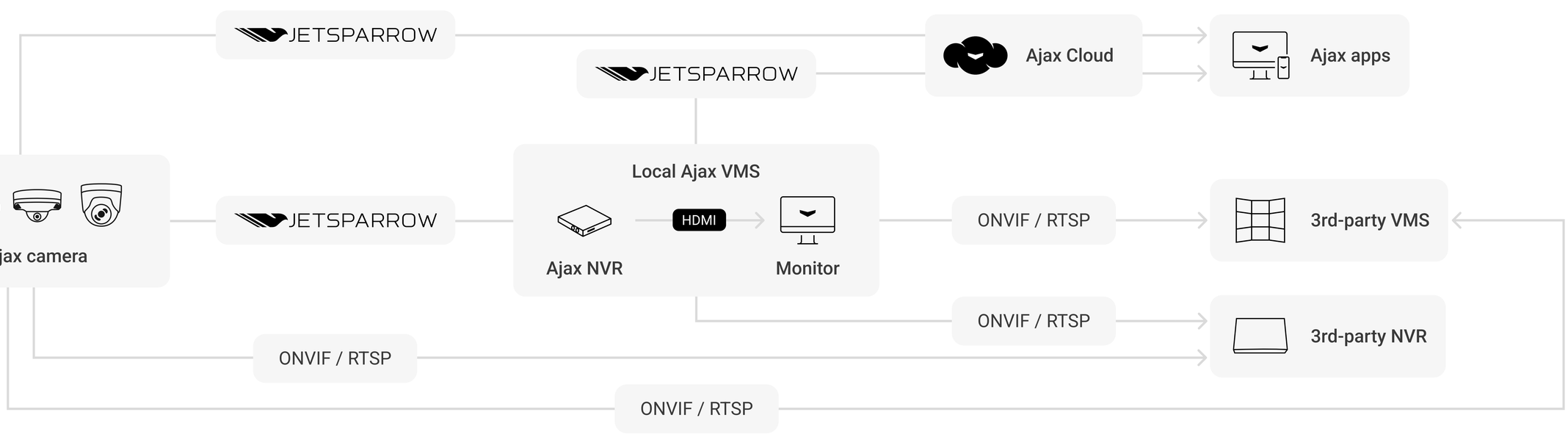

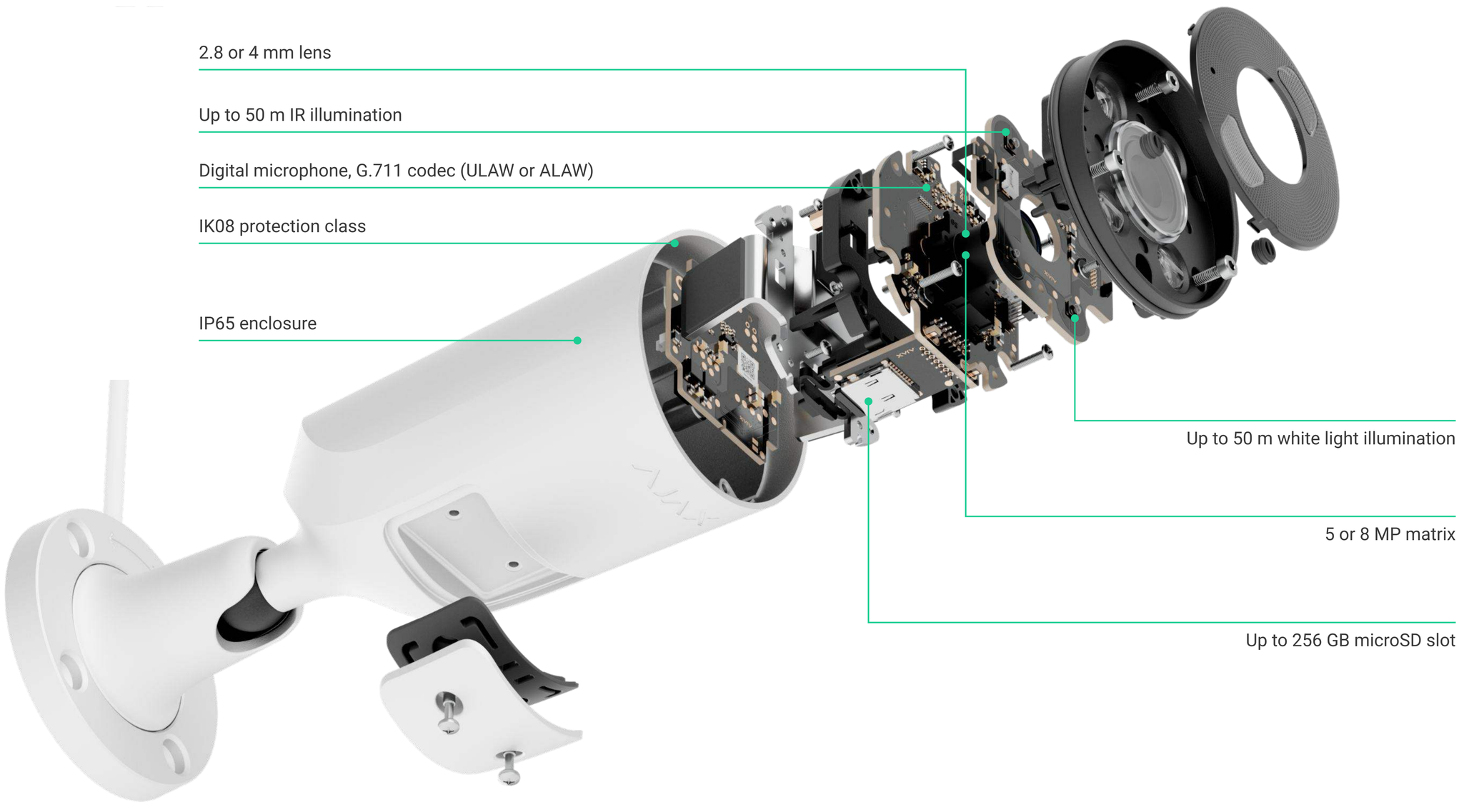

BulletCam HL cameras can operate without the Ajax NVR — the video archive is stored locally on a microSD card if installed.

DORI distance

Version	Detection	Observation	Recognition	Identification
BulletCam HL (5 Mp/2.8 mm)	65 m (213 ft)	26 m (85 ft)	13 m (42 ft)	6.5 m (21 ft)
BulletCam HL (5 Mp/4 mm)	86 m (282 ft)	34.4 m (112 ft)	17.2 m (56 ft)	8.6 m (28 ft)
BulletCam HL (8 Mp/2.8 mm)	90 m (295 ft)	36 m (118 ft)	18 m (59 ft)	9 m (29 ft)
BulletCam HL (8 Mp/4 mm)	117.5 m (385 ft)	47 m (154 ft)	23.5 m (77 ft)	11.6 m (38 ft)

Key features

JetSparrow
Proprietary Ajax protocol for fast and secure video transmission

Motion detection
Built-in software to detect motion in the frame

Object recognition with built-in AI
People
Pets
Vehicles

Visual verification of Ajax system alarms

Built-in digital microphone

Activate sirens upon detection feature

Automation scenarios

Alarm verification
Motion detection
AI-powered recognition
Detector alarm
Automation scenarios

Video and optics

Resolution

5 MP version:
up to 2880 × 1620 px
@ 25 fps (3K UHD)

8 MP version:
up to 3840 × 2160 px
@ 20 fps (4K UHD)

Lens

2.8 mm:
100°–110° viewing angle

4 mm:
75°–85° viewing angle

Image processing
True WDR
hardware and software

Video compression
H.265, H.264

Bitrate
100 Mbps full-duplex

Simultaneous live view
Up to 5 channels

Backlight
IR illumination
White light illumination

Video stream
ONVIF[1]
RTSP

Enclosure

Dimensions
197.5 × 76 × 76 mm
7.78" × 2.99" × 2.99"

Weight
550 g
19.4 oz

Colors
black, white

Protection class
IP65
IK08

Power supply

Power supply unit
8–14 V⎓

Ethernet
10/100 Mbps (RJ-45)

Ethernet port
PoE standard 802.3at/af

Power consumption
up to 8.5 W

Installation

Operating temperature range
from −30 °C to +60 °C
from −22 °F to +140 °F

Operating humidity
up to 90%

Compliance with standards

CE
RoHS
NDAA

Complete set

BulletCam HL
Installation template
Installation kit
Quick start guide

[1] Full support for Profile S, partial support for Profiles T and M.

For detailed information, scan the QR code or follow the link:

ajax.systems/support/devices/bulletcam-hl/

support@ajax.systems
@AjaxSystemsSupport_Bot
ajax.systems