DS-D5043F3-1V0S(US)
43 inch FHD 60Hz VA Monitor



- Full HD 1920 ×1080 @60 Hz
- Wide viewing angle: Horizontal 178°, Vertical 178°.
- Ultra-thin device body with ultra-thin border for 3 sides.
- Multiple interfaces: HDMI, VGA,USB
- Build-in speaker, Audio 5W*2.
- Low blue light design for eye care.
- 3D noise reduction.
- Support VESA wall mount.

▪ Specification

Display	
Screen Size	43 inch
Active Display Area	950.896 (H) mm × 529.254 (V) mm
Resolution	1920 ×1080 @60 Hz
Backlight	D-LED
Pixel Pitch	0.49005 (H) × 0.49005 (V) mm
Brightness	300 cd/m2
Viewing Angle	178° / 178°
Color Depth	8 bit
Contrast Ratio	4000 : 1
Response Time	6.5 ms (typ)
Refresh Rate	60 Hz
Haze	25%
Color Gamut	72% NTSC
Reliability	7 * 24H
Interface	
Video & Audio Input	VGA × 1, HDMI 1.4 × 1
Video & Audio Output	LINE OUT × 1, Speaker OUT × 2 (8Ω 10W)
Data Transmission Interface	USB2.0 × 1
Control Interface	无
Power	
Power Supply	100~240 VAC, 50/60Hz, 1.0 A Max
Power Consumption	≤80W
Standby Consumption	≤ 0.5 W
Working Environment	
Working Temperature	0 °C to 50 °C (41 °F to 104 °F)
Working Humidity	20% to 90% RH (Non-Condensing)
Storage Temperature	-20 °C to 60 °C (14 °F to 140 °F)
Storage Humidity	5% to 90% RH (Non-Condensing)
General	
Speaker	8 Ω 10 W ×2
Casing Material	Plastic
VESA	7.87 inch × 7.87 inch
Bezel Width	0.04 inch (top/left/right) , 0.94 inch (bottom)
Product Dimensions (W × H × D)	37.57(W) inch × 22.11 (H) inch × 2.99 (D) inch (without base) , 37.57 (W) inch×24.26 (H) inch×9.53 (D) inch (with base)
Package Dimensions (W × H × D)	1073(W)mm×668(H)mm×161(D) mm (42.24 (W) × 26.3 (H) × 6.34 (D)) inch
Net Weight	6.85 ± 0.5 kg (15.10 ± 1.1 lb.)
Gross Weight	9.98 ± 0.5 kg (22.00 ± 1.1 lb.)
Packing List	Monitor × 1, Base component × 1, Power cable × 1, HDMI cable (1.5 m) × 1, User manual × 1, Multilingual manual × 1, Remote control × 1, Screw × 6

Remarks	*The base is included by default. *The product appearance and parameters in this specification may vary from your actual device. Please consult our local sales staff for further information.

▪ Physical Interface



Interface	Description	Interface	Description
AC	AC， 100-240V～,50/60Hz,1.0A Max,input interface	HDMI	HDMI 1.4 digital signal input interface
VGA	VGA analog signal input interface	USB	USB2.0,input interface
Audio Out	3.5mm Audio output interface		

▪ Available Model

DS-D5043F3-1V0S(EU)

▪ Dimension

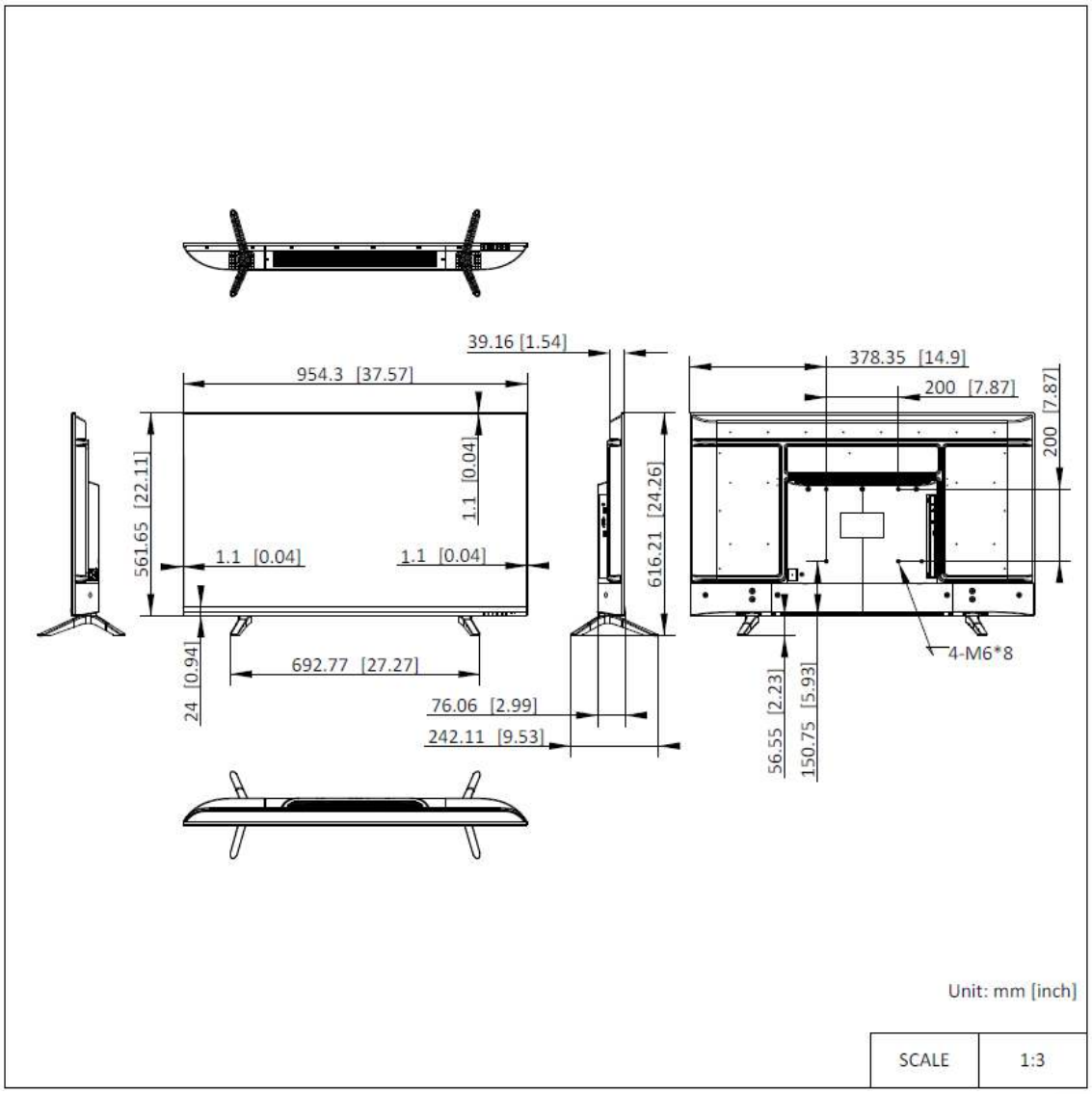

- **Accessory**
  - **Optional**

DS-DM4255W
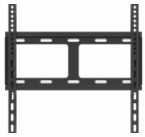

See Far, Go Further

www.hikvision.com
support@hikvision.com

© Hangzhou Hikvision Digital Technology Co., Ltd. Unless otherwise agreed, Hikvision makes no warranties, express or implied. We reserve the right to introduce modifications without notice.

HIKVISION®