DHI-KTP01L(F)

Video Intercom KIT



IP Villa Door Station:

- Anodized aluminum front panel.
- CMOS low illumination 2MP HD colorful 168.6°camera.
- Video intercom function.
- Provides 12 VDC, 600 mA power.
- Mobile phone app, talk to the visitor or unlock the door remotely on your phone.
- IK07 and IP65 rated (silicone sealant is required for the shell, see the quick start guide).
- Support H.265 and H.264.
- Standard PoE power supply (if the VTO device with 12 V power output needs to charge the load, it should be connected to a PSE switch that complies with the 802.3.at standard).

IP Indoor Monitor:

- 7" TFT Capacitive touchscreen, 1024 × 600.
- IPC surveillance.
- Alarm integration.
- High performance and cost-effective.
- Supports 8 GB SD card.
- Supports standard PoE.

Technical Specification

System(VTO)

Main Processor	Embedded Processor
Operating System	Embedded Linux Operation System
Button Type	Mechanical
Interoperability	ONVIF; CGI
Network Protocol	SIP; TCP; RTP; UPnP; P2P; DNS; UDP; RTSP; IPv4

Basic(VTO)

Camera	1/2.9" 2 MP CMOS
Field of View	H: 168.6°; V: 87.1°; D: 176.7°
WDR	120 dB
Noise Reduction	3D NR
Video Compression	H.265; H.264
Video Resolution	Main stream: 720p; WVGA; D1; CIF Sub stream: 1080p; WVGA; D1; QVGA; CIF
Video Frame Rate	25 fps
Video Bit Rate	256 kbps to 8 Mbps
Light Compensation	Auto IR
Day/Night	Auto(ICR)/Color/B/W; Color/B/W
Audio Compression	G.711a; G.711u; PCM
Audio Input	1 channel
Audio Output	Built-in speaker
Audio Mode	Two-way audio
Audio Enhancement	Echo suppression/digital noise reduction
Audio Bit Rate	16 kHz, 16 bits

Function(VTO)

Communication Mode	Full digital
Unlock Mode	Remote
Leave Videos	Yes (SD card is inserted in the indoor monitor or door station)
Storage	Supports Micro SD card (up to 256 GB)
Web Configuration	Yes

Performance(VTO)

Casing Material	Aluminum

Port(VTO)

RS-485	1
Alarm Output	1
Power Output	1 port (12 V, 600 mA)
Exit Button	1
Door Status Detection	1
Lock Control	1
Network Port	1 × RJ-45 port, 10/100 Mbps network port

Alarm(VTO)

Tamper Alarm	Yes

General(VTO)

Appearance Color	Silver
Power Supply	48 VDC, 0.4 A; PoE (802.3af/at)
Power Adapter	Optional
Installation	Surface mount (The surface mount kit comes with the surface mount bracket)
Certifications	CE
Product Dimensions	200.0 mm × 98.0 mm × 35.4 mm (7.87" × 3.86" × 1.39")
Protection	IK08, IP65 (Silicone sealant is needed, see the quick start guide)
Operating Temperature	–40 °C to +60 °C (–40 °F to +140°F)
Operating Humidity	10%–95% (RH), non-condensing
Operating Altitude	Beneath 3000 m (9842.52 ft)
Operating Environment	Outdoor
Power Consumption	≤5 W (standby), ≤7 W (working)
Gross Weight	692 g (1.53 lb)
Storage Humidity	30%–75% (RH)
Storage Temperature	0 °C to +40 °C (+32 °F to +104 °F)

System (VTH)

Main Processor	Embedded Processor
Operating System	Embedded Linux Operation System

Basic (VTH)

Screen Type	Capacitive Touchscreen
Display Screen	7" TFT
Screen Resolution	1024 (H) × 600 (V)
Audio Compression	G.711a; G.711u; PCM
Audio Input	1-channel all-direction microphone
Audio Output	Built-in 1.5 W loudspeaker
Audio Mode	Two-way audio
Audio Enhancement	Echo suppression/digital noise reduction
Audio Bit Rate	16 kbps

Function (VTH)

Communication Mode	Full digital
Information Release	Supports to receive and view notifications issued by center
Leave Videos	Yes
DND Mode	Do not disturb period can be set
Number of Extensions	9
Storage	Embedded 8 GB card

Port (VTH)

Alarm Input	6 channel (switch quantity)
Alarm Output	1 channel
Network Port	1 × RJ-45 port

Alarm(VTH)

SOS Alarm	Yes

Performance(VTH)

Casing Material	PC + ABS

General (VTH)

Appearance Color	Black
Power Supply	12 VDC, 1 A, PoE
Installation	Surface Mount
Certifications	CE; FCC; UL
Accessory	Default bracket Default alarm cable
Product Dimensions	119.6 mm × 221.5 mm × 21.5 mm (4.71" × 8.72" × 0.85")
Operating Temperature	-10°C to +55°C (+14°F to +131°F)
Operating Humidity	10%-95% (RH), non-condensing
Operating Altitude	0 m–3,000 m (0 ft–9,842.52 ft)
Operating Environment	Indoor
Power Consumption	≤4 W (standby), ≤6 W (working)
Gross Weight	0.35 kg (0.77 lb)
Storage Temperature	0 °C to +40 °C (+32 °F to +104 °F)
Storage Humidity	30%–75% (RH), non-condensing
Storage Humidity	30%–75% (RH)

System(Networking Device)

Main Processor	Embedded Processor

Port(Networking Device)

Network Port	4 × PoE ports with 10/100 Mbps Base-TX 2 × uplink ports with 10/100 Mbps Base-TX

General (Networking Device)

Appearance Color	Black
Power Supply	Built-in power supply: 100–240 VAC
Certifications	CE; FCC
Product Dimensions	119.6 mm × 221.5 mm × 23.5 mm (4.71" × 8.72" × 0.93")
Operating Temperature	–10 °C to +55 °C (+14 °F to +131 °F)

Operating Humidity	10%–90% (RH), non-condensing
Power Consumption	Idling: 0.5 W; Full load: 36 W
Gross Weight	1.11 kg (2.15 lb)

Dimensions (mm[inch])

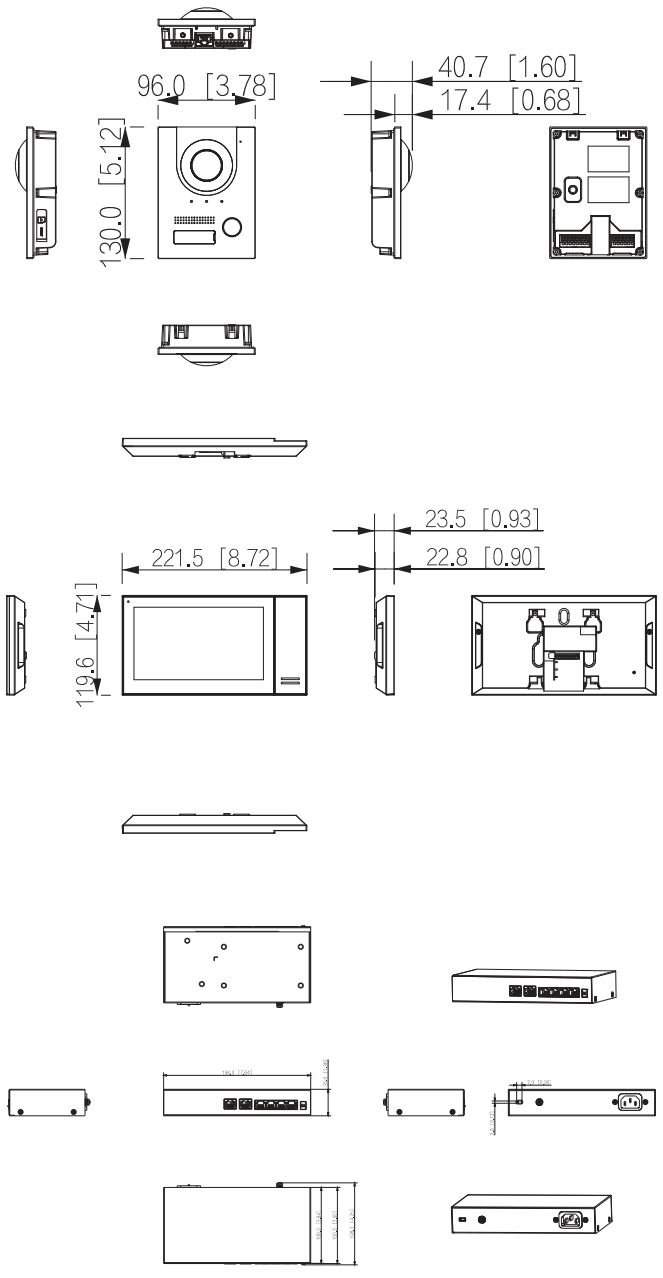

Application

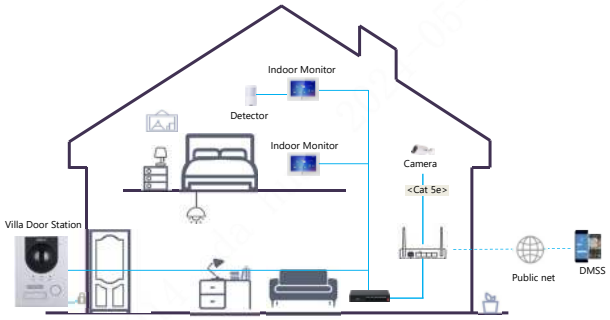

Rev 002.000 © 2024 Dahua. All rights reserved. Design and specifications are subject to change without notice.
The images, specifications and information mentioned in the document are only for reference, and might differ from the actual product.