DH-IPC-HDBW1430DE-SW

4MP IR Fixed-focal Wi-Fi Dome Network Camera



- 4-MP 1/3" CMOS image sensor, low luminance, and high definition image.
- Outputs max. 4 MP (2560 × 1440)@20 fps, and max. supports 3 MP (2304 × 1296)@25/30 fps
- H.265 codec, high compression rate, ultra-low bit rate.
- Built-in IR LED.
- SMART H.264 +/H.265+, flexible coding, applicable to various band width and storage environments.
- DWDR, 3D NR, BLC, digital watermarking, applicable to various monitoring scenes.
- Abnormality detection: Motion detection, video tampering, no SD card, SD card full, SD card error, network disconnection, IP conflict, illegal access, SMD (human).
- Supports single antenna 2.4G Wi-Fi that covers a range of up to 80 m in an open area.
- Supports max. 256 G Micro SD card.
- 12 VDC power supply.
- IP67, IK10 protection.



Series Overview

With features of simple installation, easy operation, and high performance-cost ratio, Dahua Entry series network camera is applicable to small and medium-sized scenes, such as homes/residences, small-sized retail stores, and other small and medium-sized enterprises.

Functions

Smart H.265+ & Smart H.264+

With advanced scene-adaptive rate control algorithm, Dahua smart encoding technology realizes the higher encoding efficiency than H.265 and H.264, provides high-quality video, and reduces the cost of storage and transmission.

Motion Detection

When moving objects appear in the monitoring image, Dahua Motion Detection technology triggers alarm or records.

Day/Night

Dahua Day/Night function provides color image when illumination is adequate; when illuminance is inadequate, it switches night mode and provides white and black image. It can guarantee that the network camera can work normally when illuminance changes.

Protection (IP67, IK10, Wide Voltage)

IP67: The camera passes a series of strict test on dust and soak. It has dust-proof function, and the enclosure can works normal after soaking in 1 m deep water for 30 minutes.
IK10: The enclosure can stand the punch more than 5 times from a 5 kg hammer falling from a height of 40 cm (Impact energy is 20J).
Wide voltage: The camera allows ±30% (for some power supplies) input voltage tolerance (wide voltage range), and it is widely applied to outdoor environment with instable voltage.

Cyber Security

Dahua network cameras employ a series of security technologies, including security authentication and authorization, access control protocols, trusted protection, encrypted transmission and encrypted storage. These technologies improve the camera's defense against external cyber threats and prevent malicious programs from compromising the device.

Technical Specification

Camera

Image Sensor	1/3" CMOS
Max. Resolution	2560 (H) × 1440 (V)
ROM	16 MB
RAM	64 MB
Scanning System	Progressive
Electronic Shutter Speed	Auto/Manual 1/3 s–1/100,000 s
Min. Illumination	0.03 Lux@F2.0 (Color, 30 IRE) 0.003 Lux@F2.0 (B/W, 30 IRE) 0 lux (Illuminator on)
S/N Ratio	>56 dB
Illumination Distance	30 m (98.43 ft) (IR LED)
Illuminator On/Off Control	Auto; Manual
Illuminator Number	3 (IR LED)
Pan/Tilt/Rotation Range	Pan: 0–355° Tilt: 0–75° Rotation: 0–355°

Lens

Lens Type	Fixed-focal
Lens Mount	M12
Focal Length	2.8 mm; 3.6 mm
Max. Aperture	F2.0
Field of View	2.8 mm: Horizontal: 90°; Vertical: 50°; Diagonal: 107° 3.6 mm: Horizontal: 76°; Vertical: 40°; Diagonal: 92°
Iris Control	Fixed
Close Focus Distance	2.8 mm: 1.0 m (3.28 ft) 3.6 mm: 1.4 m (4.59 ft)

	Lens	Detect	Observe	Recognize	Identify
DORI Distance	2.8 mm	68 m (223.10 ft)	27.2 m (89.24 ft)	13.6 m (44.62 ft)	6.8 m (22.31 ft)
	3.6 mm	85.2 m (279.53 ft)	34.1 m (111.88 ft)	17.0 m (55.78 ft)	8.5 m (27.89 ft)

Video

Video Compression	H.264B; H.264; H.264H; H.265
Smart Codec	Smart H.265+;Smart H.264+
Video Frame Rate	Main stream: 2560 × 1440@ (1–20 fps) Sub stream: 640 × 480@(1–25 fps) 640 × 480@(1–30 fps) *The values above are the max. frame rates of each stream; for multiple streams, the values will be subjected to the total encoding capacity.
Stream Capability	2 streams
Resolution	2560 × 1440 (2560 × 1440); 2304 × 1296 (2304 × 1296); 1080p (1920 × 1080); 1.3M(1280 × 960); 720p (1280 × 720)
Bit Rate Control	CBR/VBR
Video Bit Rate	H264: 24 kbps–4096 kbps H265: 9 kbps–4096 kbps
Day/Night	Auto (ICR)/Color/B/W
BLC	Yes
WDR	DWDR
White Balance	Auto; natural; street lamp; outdoor; manual; regional custom
Gain Control	Auto
Noise Reduction	3D NR
Motion Detection	OFF/ON (4 areas, rectangular)
Region of Interest (RoI)	Yes (4 areas)
Smart Illumination	Yes
Image Rotation	0°/180°
Mirror	Yes

Alarm

Alarm Event	No SD card; SD card full; SD card error; network disconnection; IP conflict; illegal access; motion detection; video tampering; SMD (human)

Network

Network Port	RJ-45 (10/100 Base-T)
Wi-Fi	IEEE802.11b/g/n 2.4–2.4835 GHz
Wireless Range	Up to 80 m (The performance varies based on actual environment)
SDK and API	Yes
Cyber Security	Video encrypton; confguraton encrypton; Digest; WSSE; account lockout; security logs; generaton and importng of X.509 certfcaton; HTTPS; trusted boot; trusted executon; trusted upgrade
Network Protocol	IPv4; HTTP; TCP; UDP; ARP; RTP; RTSP; RTCP; DHCP; DNS; NTP; Multicast;RTMP
Interoperability	ONVIF (Profile S/Profile G); CGI; P2P
User/Host	6 (Total bandwidth: 36 M)
Storage	Micro SD card (support max. 256 GB, sold separately)
Browser	IE Chrome Firefox
Management Software	Smart PSS; DSS; DMSS
Mobile Client	iOS; Android

Certification

Certifications	CE-LVD: EN62368-1; CE-EMC: Electromagnetic Compatibility Directive 2014/30/EU; CE-RED: Radio Equipment Directive 2014/53/EU; FCC: 47 CFR FCC Part 15, Subpart B; FCC ID: FCC PART 15C

Power

Power Supply	12 VDC
Power Consumption	Basic: 2 W (12 VDC); Max. (H.265+IR intensity): 4.9 W (12 VDC)

Environment

Operating Temperature	–40 °C to +60 °C (–40 °F to +140 °F)
Operating Humidity	≤95%
Storage Temperature	–30 °C to +60 °C (–22 °F to +140 °F)
Protection	IP67; IK10

Structure

Casing	Metal
Product Dimensions	Φ110.7 mm × 88.7 mm (Φ4.33" × 3.49")
Net Weight	414 g (0.91 lb)
Gross Weight	592 g (1.31 lb)

Ordering Information

Type	Model	Description
4MP Camera	DH-IPC-HDBW1430DEP-SW-0280B	4MP IR Fixed-focal Wi-Fi Dome Network Camera
	DH-IPC-HDBW1430DEP-SW-0360B	4MP IR Fixed-focal Wi-Fi Dome Network Camera
	DH-IPC-HDBW1430DEN-SW-0280B	4MP IR Fixed-focal Wi-Fi Dome Network Camera
	DH-IPC-HDBW1430DEN-SW-0360B	4MP IR Fixed-focal Wi-Fi Dome Network Camera
Accessories	NBS05C120050VE	12V DC/0.5A Power Adapter
	PFA136	Junction Mount
	PFB203W	Wall Mount
	PFA109+PFB220C	Ceiling Mount
	PFB203W+PFA152-E	Pole Mount
	PFM900-E	Integrated Mount Tester
	TF-P100	MicroSD Memory Card

Accessories

Included:



NBS05C120050VE
12V DC/0.5A
Power Adapter

Optional:



PFA136
Junction Mount



PFB203W
Wall Mount



PFA109+PFB220C
Ceiling Mount



PFB203W+PFA152-E
Pole Mount



PFM900-E
Integrated
Mount Tester



TF-P100
MicroSD
Memory Card

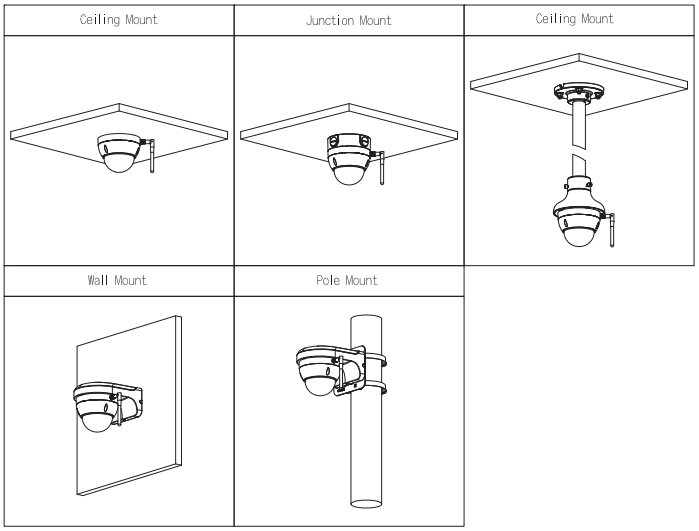

Dimensions (mm[inch])

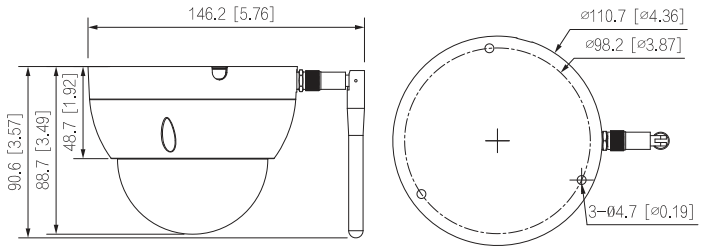

Rev 002.000 © 2022 Dahua. All rights reserved. Design and specifications are subject to change without notice.
The images, specifications and information mentioned in the document are only for reference, and might differ from the actual product.