DS-2CD2383G2-I(U)
8 MP AcuSense Fixed Turret Network Camera

AcuSense



Empowered by deep learning algorithms, Hikvision AcuSense technology brings human and vehicle targets classification alarms to front- and back-end devices. The system focuses on human and vehicle targets, vastly improving alarm efficiency and effectiveness.

- High quality imaging with 8 MP resolution
- Efficient H.265+ compression technology
- Clear imaging against strong backlight due to 120 dB WDR technology
- Focusing on human and vehicle classification based on deep learning
- -U: Built-in microphone for real-time audio security
- Water and dust resistant (IP67)

▪ Specification

Camera	
Image Sensor	1/2.8" Progressive Scan CMOS
Min. Illumination	Color: 0.005 Lux @ (F1.6, AGC ON), B/W: 0 Lux with IR
Shutter Speed	1/3 s to 1/100,000 s
Slow Shutter	Yes
P/N	P/N
Wide Dynamic Range	120 dB
Day & Night	IR cut filter
Angle Adjustment	Pan: 0° to 360°, tilt: 0° to 75°, rotate: 0° to 360°
Lens	
Lens Type	Fixed focal length, 2.8 and 4 mm optional
Focal Length & FOV	2.8 mm, horizontal FOV 107°, vertical FOV 57°, diagonal FOV 128° 4 mm, horizontal FOV 87°, vertical FOV 46°, diagonal FOV 105°
Lens Mount	M12
Iris Type	Fixed
Aperture	F1.6
DORI	
DORI	2.8 mm: D: 88 m, O: 35 m, R: 17 m, I: 9 m 4 mm: D: 108 m, O: 43 m, R: 22 m, I: 11 m
Illuminator	
Supplement Light Type	IR
Smart Supplement Light	Yes
IR Wavelength	850 nm
IR Range	Up to 30 m
Video	
Max. Resolution	3840 × 2160
Main Stream	50 Hz: 20 fps (3840 × 2160) 25 fps (3200 × 1800, 2688 × 1520, 1920 × 1080, 1280 × 720) 60 Hz: 20 fps (3840 × 2160) 30 fps (3200 × 1800, 2688 × 1520, 1920 × 1080, 1280 × 720)
Sub Stream	50 Hz: 25 fps (1280 × 720, 640 × 480, 640 × 360) 60 Hz: 30 fps (1280 × 720, 640 × 480, 640 × 360)
Third Stream	50 Hz: 10 fps (1920 × 1080, 1280 × 720, 640 × 480, 640 × 360) 60 Hz: 10 fps (1920 × 1080, 1280 × 720, 640 × 480, 640 × 360) *Third stream is supported under certain settings.
Video Compression	Main stream: H.265/H.264/H.264+/H.265+ Sub-stream: H.265/H.264/MJPEG Third stream: H.265/H.264 *Third stream is supported under certain settings.
Video Bit Rate	32 Kbps to 16 Mbps
H.264 Type	Baseline Profile/Main Profile/High Profile
H.265 Type	Main Profile
H.264+	Main stream supports

H.265+	Main stream supports
Bit Rate Control	CBR/VBR
Scalable Video Coding (SVC)	H.264 and H.265 encoding
Region of Interest (ROI)	1 fixed region for main stream and sub-stream
Audio	
Audio Compression	-U: G.711ulaw/G.711alaw/G.722.1/G.726/MP2L2/PCM/MP3/AAC-LC
Audio Bit Rate	-U: 64 Kbps (G.711ulaw/G.711alaw)/16 Kbps (G.722.1)/16 Kbps (G.726)/16-64 Kbps (AAC-LC)/32-192 Kbps (MP2L2)/8-320 Kbps (MP3)
Audio Sampling Rate	-U: 8 kHz/16 kHz/32 kHz/44.1 kHz/48 kHz
Environment Noise Filtering	-U: Yes
Network	
Protocols	TCP/IP, ICMP, HTTP, HTTPS, FTP, DHCP, DNS, DDNS, RTP, RTSP, NTP, UPnP, SMTP, IGMP, 802.1X, QoS, IPv4, IPv6, UDP, Bonjour, SSL/TLS, PPPoE, SNMP, WebSocket, WebSockets
Simultaneous Live View	Up to 6 channels
API	Open Network Video Interface (Profile S, Profile G), ISAPI, SDK
User/Host	Up to 32 users. 3 user levels: administrator, operator and user
Security	Password protection, complicated password, HTTPS encryption, IP address filter, Security Audit Log, basic and digest authentication for HTTP/HTTPS, TLS 1.1/1.2, WSSE and digest authentication for Open Network Video Interface
Network Storage	NAS (NFS, SMB/CIFS), auto network replenishment (ANR)
Client	iVMS-4200, Hik-Connect, Hik-Central
Web Browser	Plug-in required live view: IE 10, IE 11 Plug-in free live view : Chrome 57.0+, Firefox 52.0+ Local service: Chrome 57.0+, Firefox 52.0+
Image	
Image Parameters Switch	Yes
Image Settings	Rotate, mirror, privacy mask, saturation, brightness, contrast, sharpness, gain, white balance adjustable by client software or web browser
Day/Night Switch	Day, Night, Auto, Schedule
Image Enhancement	BLC, HLC, 3D DNR
SNR	≥ 52 dB
Interface	
Ethernet Interface	1 RJ45 10 M/100 M self-adaptive Ethernet port
On-board Storage	Built-in memory card slot, support microSD/SDHC/SDXC card, up to 512 GB
Built-in Microphone	-U: yes
Hardware Reset	Yes
Event	
Basic Event	Motion detection (human and vehicle targets classification), video tampering alarm, exception
Face Detection	Yes
Deep Learning Function	
Perimeter Protection	Line crossing detection, intrusion detection Supports human and vehicle targets classification

General	
Linkage Method	Upload to FTP/memory card/NAS, notify surveillance center, trigger recording, trigger capture, send email
Camera Material	Aluminum alloy body
Camera Dimension	Ø127.3 mm × 95.9 mm (Ø5.0" × 3.8")
Package Dimension	150 mm × 150 mm × 141 mm (5.9" × 5.9" × 5.6")
Camera Weight	Approx. 600 g (1.3 lb.)
With Package Weight	Approx. 891 g (2.0 lb.)
Storage Conditions	-30 °C to 60 °C (-22 °F to 140 °F). Humidity 95% or less (non-condensing)
Startup and Operating Conditions	-30 °C to 60 °C (-22 °F to 140 °F). Humidity 95% or less (non-condensing)
Web Client Language	33 languages English, Russian, Estonian, Bulgarian, Hungarian, Greek, German, Italian, Czech, Slovak, French, Polish, Dutch, Portuguese, Spanish, Romanian, Danish, Swedish, Norwegian, Finnish, Croatian, Slovenian, Serbian, Turkish, Korean, Traditional Chinese, Thai, Vietnamese, Japanese, Latvian, Lithuanian, Portuguese (Brazil), Ukrainian
General Function	Anti-flicker, heartbeat, password reset via email, pixel counter
Firmware Version	V5.5.113
Software Reset	Yes
Power Consumption and Current	12 VDC, 0.5 A, max. 6 W PoE (802.3af, 36 V to 57 V), 0.20 A to 0.13 A, max. 7.5 W
Power Supply	12 VDC ± 25%, reverse polarity protection PoE: 802.3af, Class 3
Power Interface	Ø5.5 mm coaxial power plug
Approval	
EMC	FCC (47 CFR Part 15, Subpart B); CE-EMC (EN 55032: 2015, EN 61000-3-2: 2014, EN 61000-3-3: 2013, EN 50130-4: 2011 +A1: 2014); RCM (AS/NZS CISPR 32: 2015); IC (ICES-003: Issue 6, 2016); KC (KN 32: 2015, KN 35: 2015)
Safety	UL (UL 60950-1); CB (IEC 60950-1:2005 + Am 1:2009 + Am 2:2013); CE-LVD (EN 60950-1:2005 + Am 1:2009 + Am 2:2013);
Environment	CE-RoHS (2011/65/EU); WEEE (2012/19/EU); Reach (Regulation (EC) No 1907/2006)
Protection	IP67 (IEC 60529-2013)

▪ Available Model

DS-2CD2383G2-I (2.8/4 mm)
DS-2CD2383G2-IU (2.8/4 mm)
DS-2CD2383G2-IU (2.8 mm) (Black)

▪ Typical Application

Hikvision products are classified into three levels according to their anti-corrosion performance. Refer to the following description to choose for your using environment.

This model has NO SPECIFIC PROTECTION.

Level	Description
Top-level protection	Hikvision products at this level are equipped for use in areas where professional anti-corrosion protection is a must. Typical application scenarios include coastlines, docks, chemical plants, and more.
Moderate protection	Hikvision products at this level are equipped for use in areas with moderate anti-corrosion demands. Typical application scenarios include coastal areas about 2 kilometers (1.24 miles) away from coastlines, as well as areas affected by acid rain.
No specific protection	Hikvision products at this level are equipped for use in areas where no specific anti-corrosion protection is needed.

▪ Dimension

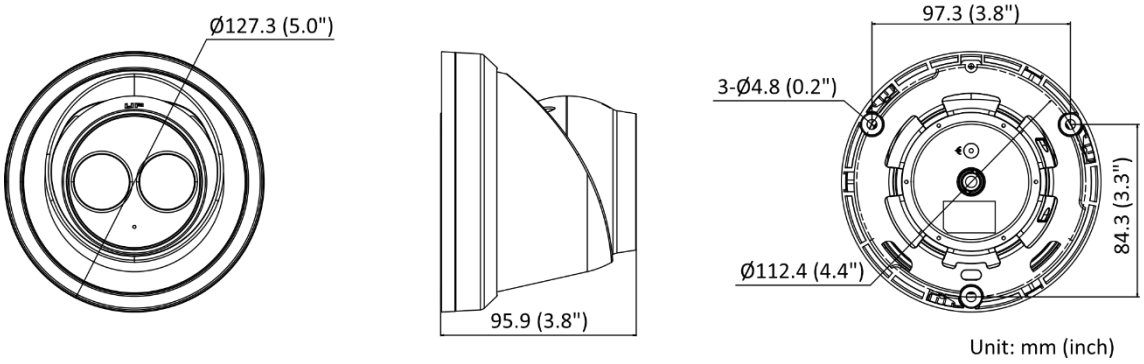

▪ Accessory

▪ Optional

DS-1271ZJ-130-TRL Pendant Mount	DS-1276ZJ-SUS (Black) Corner Mount	DS-1281ZJ-M (Black) Inclined Ceiling Mount	DS-1275ZJ-SUS Vertical Pole Mount	DS-1271ZJ-130-TRL (Black) Pendant Mount
				
DS-1280ZJ-DM8 (Black) Junction Box	**DS-1281ZJ-M Inclined ceiling mount**	**DS-1273ZJ-130B-TRL Wall mount**	**DS-1276ZJ-SUS Corner mount**	**DS-1275ZJ-SUS (Black) Vertical Pole Mount**
				

DS-1273ZJ-130-TRL(Black) Wall Mount	DS-1280ZJ-DM8 Junction box	DS-1273ZJ-130-TRL Wall mount
		

Distributed by

HIKVISION

Headquarters
No.555 Qianmo Road, Binjiang District,
Hangzhou 310051, China
T +86-571-8807-5998
overseasbusiness@hikvision.com

Hikvision USA
T +1-909-895-0400
sales.usa@hikvision.com

Hikvision Europe
T +31-23-5542770
sales.eu@hikvision.com

Hikvision UK & Ireland
T +01628-902140
sales.uk@hikvision.com

Hikvision UAE
T +971-4-4432090
salesme@hikvision.com

Hikvision Russia
T +7-495-669-67-99
saleru@hikvision.com

Hikvision Australia
T +61-2-8599-4233
salesau@hikvision.com

Hikvision Italy
T +39-0438-6902
info.it@hikvision.com

Hikvision South Africa
Tel: +27 (10) 0351172
sale.africa@hikvision.com

Hikvision Singapore
T +65-6684-4718
sg@hikvision.com

Hikvision Korea
T +82-(0)31-731-8817
sales.korea@hikvision.com

Hikvision India
T +91-22-28469900
sales@pramahikvision.com

Hikvision Brazil
T +55 11 3318-0050
Latam.support@hikvision.com

Hikvision France
T +33(0)1-85-330-450
info.fr@hikvision.com

Hikvision Spain
T +34-91-737-16-55
info.es@hikvision.com

Hikvision Poland
T +48-22-460-01-50
info.pl@hikvision.com

Hikvision Canada
T +1-866-200-6690
sales.canada@hikvision.com

Hikvision Turkey
T +90 (216)521 7070- 7074
sales.tr@hikvision.com

Hikvision Kazakhstan
T +7-727-9730667
nikia.panfilov@hikvision.ru

Hikvision Tashkent
T +99-87-1238-9438
uzb@hikvision.ru

Hikvision Indonesia
T +62-21-2933759
Sales.Indonesia@hikvision.com

Hikvision Thailand
T +662-275-9949
sales.thailand@hikvision.com

Hikvision Malaysia
T +601-7652-2413
sales.my@hikvision.com

Hikvision Vietnam
T +84-974270888
sales.vt@hikvision.com

Hikvision Hong Kong
T +852-2151-1761
info.hk@hikvision.com

Hikvision Colombia
sales.colombia@hikvision.com

© Hikvision Digital Technology Co., Ltd. 2020 | Data subject to change without notice |

050511320220531