DS-2CD2187G3-LI(S2U)Y

8 MP Smart Hybrid Light ColorVu Fixed Dome Network Camera





Hikvision ColorVu technology provides 24/7 vivid colorful images with F1.0 advanced lenses, high performance sensors and friendly lighting. F1.0 super-aperture collects more light to produce brighter images. Advanced sensor technology can vastly improve the utilization of available light.

- HikAI-ISP for excellent noise reduction effect
- 24/7 colorful imaging via ColorVu technology
- Focus on Person and Vehicle classification based on deep learning
- Scene-adaptive WDR
- -S2U: Built-in arrayed dual-microphone for real-time high quality audio security
- Smart Hybrid Light: Integrates IR and White lights, 3 supplemental lighting modes
- Anti-corrosion design, providing reliability and longevity compared to standard (NEMA4X)
- Water and dust resistant (IP67) and vandal-resistant (IK10)

▪ Specification

Camera	
Image Sensor	1/1.8" Progressive Scan CMOS
Max. Resolution	3840 × 2160
Min. Illumination	Color: 0.0005 Lux @ (F1.0, AGC ON), 0 Lux with light
Shutter Time	1 s to 1/100,000 s
Day & Night	IR cut filter
Angle Adjustment	Pan: 0° to 355°, tilt: 0° to 75°, rotate: 0° to 355°
Lens	
Lens Type	Fixed focal lens, 2.8 and 4 mm optional
Focal Length & FOV	2.8 mm, horizontal FOV 108.8°, vertical FOV 56.4°, diagonal FOV 134.3° 4 mm, horizontal FOV 93.3°, vertical FOV 47.2°, diagonal FOV 114.2°
Lens Mount	M16
Iris Type	Fixed
Aperture	F1.0
Depth of Field	2.8 mm: 3.3 m to ∞ 4 mm: 3.8 m to ∞
DORI	
DORI	2.8 mm: D: 89 m, O: 35 m, R: 17 m, I: 8 m 4 mm: D: 109 m, O: 43 m, R: 21 m, I: 10 m
Illuminator	
Supplement Light Type	White Light, IR
Supplement Light Range	Up to 30 m
Smart Supplement Light	Yes
IR Wavelength	850 nm
Video	
Main Stream	50 Hz: 25 fps (3840 × 2160, 3200 × 1800, 2688 × 1520, 1920 × 1080, 1280 × 720) 60 Hz: 30 fps (3840 × 2160， 3200 × 1800, 2688 × 1520, 1920 × 1080, 1280 × 720)
Sub-Stream	50 Hz: 25 fps (1280 × 720, 640 × 480, 640 × 360) 60 Hz: 30 fps (1280 × 720, 640 × 480, 640 × 360)
Third Stream	50 Hz: 10 fps (1920 × 1080, 1280 × 720, 640 × 480, 640 × 360) 60 Hz: 10 fps (1920 × 1080, 1280 × 720, 640 × 480, 640 × 360) *Third stream is supported under certain settings.
Video Compression	Main stream: H.265/H.264/H.264+/H.265+, Sub-stream: H.265/H.264/MJPEG, Third stream: H.265/H.264, *Third stream is supported under certain settings.
Video Bit Rate	32 Kbps to 16 Mbps
H.264 Type	Baseline Profile, Main Profile, High Profile
H.265 Type	Main Profile
Bit Rate Control	CBR, VBR
Scalable Video Coding (SVC)	H.264 and H.265 encoding
Region of Interest (ROI)	1 fixed region for main stream

Audio	
Audio Type	-2U: Mono sound
Audio Bit Rate	-2U: 64 Kbps (G.711ulaw/G.711alaw)/16 Kbps (G.722.1)/16 Kbps (G.726)/16 Kbps to 64 Kbps (AAC-LC)/32 to 192 Kbps (MP2L2)/8 to 320 Kbps (MP3)
Audio Compression	-2U: G.711/G.722.1/G.726/MP2L2/PCM/MP3/AAC-LC
Audio Sampling Rate	-2U: 8 kHz/16 kHz/32 kHz/48 kHz
Environment Noise Filtering	-2U: Yes
Network	
Protocols	TCP/IP, ICMP, HTTP, HTTPS, FTP, DHCP, DNS, DDNS, RTP, RTSP, RTCP, NTP, UPnP, SMTP, IGMP, 802.1X, QoS, IPv4, IPv6, UDP, Bonjour, SSL/TLS, PPPoE, SNMP, WebSocket, WebSockets, SRTP, SFTP
Simultaneous Live View	Up to 6 channels
API	ONVIF (Profile S, Profile G, Profile T), ISAPI, SDK, ISUP
User/Host	Up to 32 users 3 user levels: administrator, operator, and user
Security	Password protection, complicated password, HTTPS encryption, 802.1X authentication (EAP-TLS, EAP-LEAP, EAP-MD5), watermark, IP address filter, basic and digest authentication for HTTP/HTTPS, WSSE and digest authentication for Open Network Video Interface, RTP/RTSP over HTTPS, control timeout settings, security audit log, TLS 1.1/1.2/1.3, host authentication (MAC address)
Network Storage	NAS (NFS, SMB/CIFS), Auto Network Replenishment (ANR)
Client	iVMS-4200, Hik-Connect, Hik-Central
Web Browser	Plug-in free live view: Chrome 80+, Firefox 80+, Edge 89+, Local service: Chrome 80+, Firefox 80+, Edge 89+
Image	
Image Parameters Switch	Yes
Image Settings	Rotate mode, saturation, brightness, contrast, sharpness, gain, white balance, adjustable by client software or web browser
Day/Night Switch	Day, Night, Auto, Schedule
Image Enhancement	BLC, HLC, 3D DNR, Distortion Correction, Defog
SNR	≥ 52 dB
Wide Dynamic Range (WDR)	130 dB
Image Stabilization	EIS
Privacy Mask	4 programmable polygon privacy masks
Interface	
Ethernet Interface	1 RJ45 10 M/100 M self-adaptive Ethernet port
On-Board Storage	Built-in memory card slot, support microSD/microSDHC/microSDXC card, up to 512 GB
Audio	-S2U models support: Built-in Microphone: Arrayed dual-microphone 1 input (line in), two-core terminal block, max. input amplitude: 3.3 Vpp, input impedance: 4.7 KΩ, interface type: non-equilibrium, 1 output (line out), two-core terminal block, max. output amplitude: 3.3 Vpp, output impedance: 100 Ω, interface type: non-equilibrium
Alarm	-S: 1 input, 1 output (max. 24 VAC/VDC, 1A)
Reset Key	Yes

Event	
Basic Event	Motion detection (support alarm triggering by specified target types (human and vehicle)), video tampering alarm, exception
Linkage	Upload to FTP/NAS/memory card, notify surveillance center, trigger recording, trigger capture, send email, -S model: trigger alarm output
Smart Event	Scene change detection
Deep Learning Function	
Face Capture	Yes
Perimeter Protection	Line crossing, intrusion, region entrance, region exiting Support alarm triggering by specified target types (human and vehicle)
General	
Power	12 VDC ± 25%, 0.75 A, max. 9 W, Ø5.5 mm coaxial power plug, reverse polarity protection, PoE: IEEE 802.3af, Class 3, max. 10.5 W
Material	Base: aluminum alloy, cover: aluminum alloy
Dimension	Ø121.5 mm × 97.6 mm (Ø4.78" × 3.84")
Package Dimension	234 mm × 120 mm × 117 mm (9.2" × 4.7" × 4.6")
Weight	Approx. 600 g (1.3 lb.)
With Package Weight	Approx. 825 g (1.8 lb.)
Storage Conditions	-30 °C to 60 °C (-22 °F to 140 °F). Humidity 95% or less (non-condensing)
Startup and Operating Conditions	-30 °C to 60 °C (-22 °F to 140 °F). Humidity 95% or less (non-condensing)
General Function	Heartbeat, mirror, flash log, password reset via email, pixel counter, anti-banding
Language	33 languages: English, Russian, Estonian, Bulgarian, Hungarian, Greek, German, Italian, Czech, Slovak, French, Polish, Dutch, Portuguese, Spanish, Romanian, Danish, Swedish, Norwegian, Finnish, Croatian, Slovenian, Serbian, Turkish, Korean, Traditional Chinese, Thai, Vietnamese, Japanese, Latvian, Lithuanian, Portuguese (Brazil), Ukrainian
Approval	
EMC	CE-EMC: EN 55032:2015+A1:2020, EN 50130-4:2011+A1:2014, EN IEC 61000-3-2:2019+A1:2021, EN 61000-3-3:2013+A1:2019+A2:2021, RCM: AS/NZS CISPR 32: 2015, IC: ICES-003: Issue 7, KC: KN32: 2015, KN35: 2015
Safety	UL: UL 62368-1, CB: IEC 62368-1: 2014+A11, CE-LVD: EN 62368-1: 2014/A11: 2017, BIS: IS 13252 (Part 1): 2010/IEC 60950-1: 2005
Environment	CE-RoHS: 2011/65/EU, WEEE: 2012/19/EU, Reach: Regulation (EC) No 1907/2006
Protection	IP67: IEC 60529-2013, IK10: IEC 62262:2002
Anti-Corrosion Protection	NEMA 4X (NEMA 250-2018)

▪ Typical Application

Hikvision products are classified into three levels according to their anti-corrosion performance. Refer to the following description to choose for your using environment.

This model has MODERATE PROTECTION.

Level	Description
Top-level protection	Hikvision products at this level are equipped for use in areas where professional anti-corrosion protection is a must. Typical application scenarios include coastlines, docks, chemical plants, and more.
Moderate protection	Hikvision products at this level are equipped for use in areas with moderate anti-corrosion demands. Typical application scenarios include coastal areas about 2 kilometers (1.24 miles) away from coastlines, as well as areas affected by acid rain.
No specific protection	Hikvision products at this level are equipped for use in areas where no specific anti-corrosion protection is needed.

▪ Available Model

DS-2CD2187G3-LIS2UY(2.8mm)
DS-2CD2187G3-LIS2UY(4mm)
DS-2CD2187G3-LIS2UY(2.8mm)(Black)
DS-2CD2187G3-LIY(2.8mm)
DS-2CD2187G3-LIY(4mm)

▪ Dimension

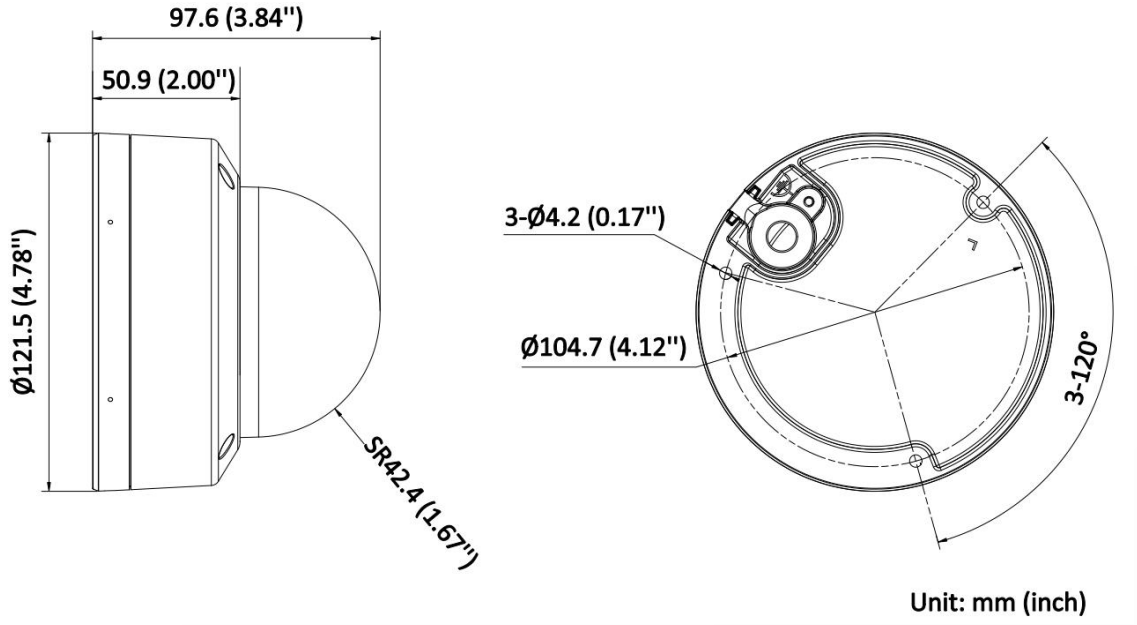

▪ Accessory

▪ Optional

DS-1272ZJ-120 Wall mount	DS-1272ZJ-120B Wall mount	DS-1271ZJ-120 Pendant Mount	DS-1275ZJ-SUS Vertical pole mount	DS-1276ZJ-SUS Corner mount
				
			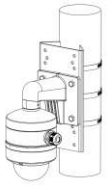	
DS-1280ZJ-DM46 **Junction box**	**DS-2280ZJ-WA120** **Junction box**	**DS-2210ZJ-WA-120** **Pendant Mount**	**DS-2200ZJ-WA-120** **Wall mount**	**DS-2200ZJ-WAJ-120** **Wall mount**
				
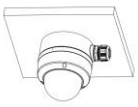	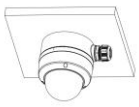			

See Far, Go Further

www.hikvision.com
support@hikvision.com

© Hangzhou Hikvision Digital Technology Co., Ltd. Unless otherwise agreed, Hikvision makes no warranties, express or implied. We reserve the right to introduce modifications without notice.

HIKVISION®