DS-2CD2127G2(-SU)
2 MP ColorVu Fixed Dome Network Camera





Hikvision ColorVu technology provides 24/7 vivid colorful images with F1.0 advanced lenses and high performance sensors. F1.0 super-aperture collects more light to produce brighter images. Advanced sensor technology can vastly improve the utilization of available light.

- High quality imaging with 2 MP resolution
- Efficient H.265+ compression technology
- Clear imaging against strong back light due to 120 dB WDR technology
- 24/7 colorful imaging
- Focus on human and vehicle classification based on deep learning
- -SU: Built-in microphone for real-time audio security, Audio and alarm interface available
- Water and dust resistant (IP67) and vandal resistant (IK10)

▪ Specification

Camera	
Image Sensor	1/2.8" Progressive Scan CMOS
Shutter Speed	1/3 s to 1/100,000 s
Min. Illumination	Color: 0.0005 Lux @ (F1.0, AGC ON)
Slow Shutter	Yes
P/N	P/N
Wide Dynamic Range	120 dB
Angle Adjustment	Pan: 0° to 355°, tilt: 0° to 75°, rotate: 0° to 355°
Lens	
Lens Type	Fixed focal lens, 2.8 and 4 mm optional
Focal Length & FOV	2.8 mm, horizontal FOV 107°, vertical FOV 56°, diagonal FOV 127° 4 mm, horizontal FOV 84°, vertical FOV 45°, diagonal FOV 99°
Lens Mount	M12
Iris Type	Fixed
Aperture	F1.0
Working Distance	2.8 mm: 1.7 m to ∞ 4 mm: 2.3 m to ∞
DORI	
DORI	2.8 mm: D: 46 m, O: 18 m, R: 9 m, I: 4 m 4 mm: D: 56 m, O: 22 m, R: 11 m, I: 5 m
Video	
Max. Resolution	1920 × 1080
Main Stream	50 Hz: 25 fps (1920 × 1080, 1280 × 720) 60 Hz: 30 fps (1920 × 1080, 1280 × 720)
Sub-Stream	50 Hz: 25 fps (640 × 480, 640 × 360) 60 Hz: 30 fps (640 × 480, 640 × 360)
Third Stream	50 Hz: 10 fps (1920 × 1080, 1280 × 720, 640 × 480, 640 × 360) 60 Hz: 10 fps (1920 × 1080, 1280 × 720, 640 × 480, 640 × 360) *Third stream is supported under certain settings.
Video Compression	Main stream: H.265/H.264/H.265+/H.264+ Sub-stream: H.265/H.264/MJPEG Third stream: H.265/H.264 *Third stream is supported under certain settings.
Video Bit Rate	32 Kbps to 8 Mbps
H.264 Type	Baseline Profile/Main Profile/High Profile
H.265 Type	Main Profile
H.264+	Main stream supports
H.265+	Main stream supports
Bit Rate Control	CBR/VBR
Scalable Video Coding (SVC)	H.265 and H.264 encoding
Region of Interest (ROI)	1 fixed region for main stream and sub-stream
Audio	
Environment Noise Filtering	-SU: Yes

Audio Sampling Rate	-SU: 8 kHz/16 kHz/32 kHz/44.1 kHz/48 kHz
Audio Compression	-SU: G.711ulaw/G.711alaw/G.722.1/G.726/MP2L2/PCM/MP3/AAC
Audio Bit Rate	-SU: 64 Kbps(G.711 ulaw)/64 Kbps(G.711 alaw)/16 Kbps(G.722.1)/16 Kbps(G.726)/32 to 192 Kbps(MP2L2)/8 to 320 Kbps(MP3)/16 to 64 Kbps(AAC)
Network	
Simultaneous Live View	Up to 6 channels
API	Open Network Video Interface (Profile S, Profile G), ISAPI, SDK
Protocols	TCP/IP, ICMP, HTTP, HTTPS, FTP, DHCP, DNS, DDNS, RTP, RTSP, NTP, UPnP, SMTP, IGMP, 802.1X, QoS, IPv4, IPv6, UDP, Bonjour, SSL/TLS, PPPoE, SNMP
User/Host	Up to 32 users. 3 user levels: administrator, operator and user
Security	Password protection, complicated password, HTTPS encryption, IP address filter, Security Audit Log, basic and digest authentication for HTTP/HTTPS, TLS 1.1/1.2, WSSE and digest authentication for Open Network Video Interface
Network Storage	NAS (NFS, SMB/CIFS), auto network replenishment (ANR)
Client	iVMS-4200, Hik-Connect, Hik-Central
Web Browser	Plug-in required live view: IE 10, IE 11 Plug-in free live view: Chrome 57.0+, Firefox 52.0+ Local service: Chrome 57.0+, Firefox 52.0+
Image	
SNR	≥ 52 dB
Day/Night Switch	Day, Night, Auto, Schedule
Image Enhancement	BLC, HLC, 3D DNR
Image Parameters Switch	Yes
Image Settings	Rotate mode, saturation, brightness, contrast, sharpness, gain, white balance adjustable by client software or web browser
Interface	
Ethernet Interface	1 RJ45 10 M/100 M self-adaptive Ethernet port
On-Board Storage	Built-in memory card slot, support microSD/SDHC/SDXC card, up to 256 GB
Built-in Microphone	-SU: Yes
Audio	-SU: 1 input (line in), max. input amplitude: 3.3 vpp, input impedance: 4.7 KΩ, interface type: non-equilibrium; 1 output (line out), max. output amplitude: 3.3 vpp, output impedance: 100 Ω, interface type: non-equilibrium, mono sound
Alarm	-SU: 1 input, 1 output (TTL: max. 12 VDC, 30 mA)
Hardware Reset	Yes
Event	
Basic Event	Motion detection (human and vehicle targets classification), video tampering alarm, exception
Smart Event	Scene change detection
Deep Learning Function	
Face Capture	Yes
Perimeter Protection	Line crossing detection, intrusion detection, region entrance detection, region exiting detection Supports human and vehicle targets classification

General	
Power	12 VDC ± 25% PoE: 802.3af, Class 3
Camera Material	Base: Metal, cover: Metal
Screw Material	SUS304
Camera Dimension	Ø121.4 × 100.1 mm (Ø4.8" × 3.9")
Package Dimension	150 mm × 150 mm × 141 mm (5.9" × 5.9" ×5.6")
Camera Weight	Approx. 560 g (1.2 lb.)
With Package Weight	Approx. 810 g (1.8 lb.)
Storage Conditions	-30 °C to 60 °C (-22 °F to 140 °F). Humidity 95% or less (non-condensing)
Startup and Operating Conditions	-30 °C to 60 °C (-22 °F to 140 °F). Humidity 95% or less (non-condensing)
Linkage Method	Upload to NAS/memory card/FTP, notify surveillance center, trigger recording, trigger capture, send email -S model also supports: trigger alarm output, audible warning
Firmware Version	V5.5.113
Power Consumption and Current	12 VDC, 0.4 A, max. 5 W PoE (802.3af, 36 V to 57 V), 0.20 A to 0.15 A, max. 6.5 W
Power Interface	Ø5.5 mm coaxial power plug
Web Client Language	33 languages English, Russian, Estonian, Bulgarian, Hungarian, Greek, German, Italian, Czech, Slovak, French, Polish, Dutch, Portuguese, Spanish, Romanian, Danish, Swedish, Norwegian, Finnish, Croatian, Slovenian, Serbian, Turkish, Korean, Traditional Chinese, Thai, Vietnamese, Japanese, Latvian, Lithuanian, Portuguese (Brazil), Ukrainian
General Function	Anti-flicker, heartbeat, mirror, privacy mask, flash log, password reset via email, pixel counter
Software Reset	Yes
Approval	
EMC	FCC SDoC (47 CFR Part 15, Subpart B); CE-EMC (EN 55032: 2015, EN 61000-3-2: 2014, EN 61000-3-3: 2013, EN 50130-4: 2011 +A1: 2014); RCM (AS/NZS CISPR 32: 2015); IC (ICES-003: Issue 6, 2016)
Safety	UL (UL 60950-1); CB (IEC 60950-1:2005 + Am 1:2009 + Am 2:2013, IEC 62368-1:2014); CE-LVD (EN 60950-1:2005 + Am 1:2009 + Am 2:2013, IEC 62368-1:2014); LOA (IEC/EN 60950-1)
Environment	CE-RoHS (2011/65/EU); WEEE (2012/19/EU); Reach (Regulation (EC) No 1907/2006)
Protection	IP67 (IEC 60529-2013), IK10 (IEC 62262:2002)

▪ Available Model

DS-2CD2127G2 (2.8/4 mm)

DS-2CD2127G2-SU (2.8/4 mm)

▪ Dimension

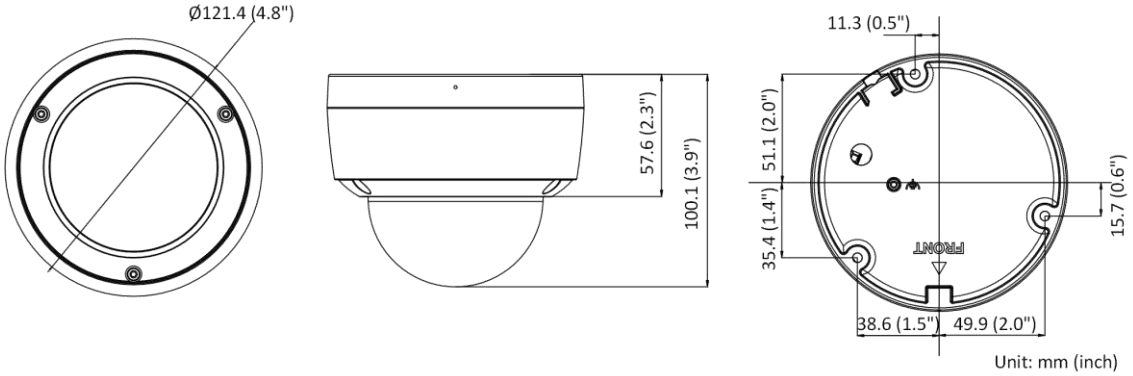

▪ Accessory

▪ Optional

DS-1276ZJ-SUS Corner Mount	DS-1272ZJ-120 Wall Mount	DS-1253ZJ-M Rain Shade	DS-1280ZJ-DM46 Junction Box	DS-1272ZJ-120B Wall Mount
				

DS-1275ZJ-SUS Vertical Pole Mount	DS-1271ZJ-120 Pendant Mount	DS-1272ZJ-120-TR15 Wall Mount
		

Distributed by

Headquarters
No.555 Qianmo Road, Binjiang District,
Hangzhou 310051, China
T +86-571-8807-5998
overseasbusiness@hikvision.com

Hikvision USA
T +1-909-895-0400
sales.usa@hikvision.com

Hikvision Europe
T +31-23-5542770
sales.eu@hikvision.com

Hikvision UK & Ireland
T +01628-902140
sales.uk@hikvision.com

Hikvision UAE
T +971-4-4432090
salesme@hikvision.com

Hikvision Russia
T +7-495-669-67-99
saleru@hikvision.com

Hikvision Australia
T +61-2-8599-4233
salesau@hikvision.com

Hikvision Italy
T +39-0438-6902
info.it@hikvision.com

Hikvision South Africa
Tel: +27 (10) 0351172
sale.africa@hikvision.com

Hikvision Singapore
T +65-6684-4718
sg@hikvision.com

Hikvision Korea
T +82-(0)31-731-8817
sales.korea@hikvision.com

Hikvision India
T +91-22-28469900
sales@pramahikvision.com

Hikvision Brazil
T +55 11 3318-0050
Latam.support@hikvision.com

Hikvision France
T +33(0)1-85-330-450
info.fr@hikvision.com

Hikvision Spain
T +34-91-737-16-55
info.es@hikvision.com

Hikvision Poland
T +48-22-460-01-50
info.pl@hikvision.com

Hikvision Canada
T +1-866-200-6690
sales.canada@hikvision.com

Hikvision Turkey
T +90 (216)521 7070- 7074
sales.tr@hikvision.com

Hikvision Kazakhstan
T +7-727-9730667
nikia.panfilov@hikvision.ru

Hikvision Tashkent
T +99-87-1238-9438
uzb@hikvision.ru

Hikvision Indonesia
T +62-21-2933759
Sales.Indonesia@hikvision.com

Hikvision Thailand
T +662-275-9949
sales.thailand@hikvision.com

Hikvision Malaysia
T +601-7652-2413
sales.my@hikvision.com

Hikvision Vietnam
T +84-974270888
sales.vt@hikvision.com

Hikvision Hong Kong
T +852-2151-1761
info.hk@hikvision.com

Hikvision Colombia
sales.colombia@hikvision.com

© Hikvision Digital Technology Co., Ltd. 2020 | Data subject to change without notice |

050511320210331