# DS-2CD2323G2-I(U)
## 2 MP AcuSense Fixed Turret Network Camera



AcuSense




Empowered by deep learning algorithms, Hikvision AcuSense technology brings human and vehicle targets classification alarms to front- and back-end devices. The system focuses on human and vehicle targets, vastly improving alarm efficiency and effectiveness.

- High quality imaging with 2 MP resolution
- Clear imaging against strong backlight due to 120 dB WDR technology
- Efficient H.265+ compression technology
- -U: Built-in microphone for real-time audio security
- Focus on human and vehicle targets classification based on deep learning
- Water and dust resistant (IP67)

## ▪ Specification

| | |
|---|---|
| **Camera** | |
| Image Sensor | 1/2.8" Progressive Scan CMOS |
| Max. Resolution | 1920 × 1080 |
| Min. Illumination | Color: 0.005 Lux @ (F1.6, AGC ON), B/W: 0 Lux with IR |
| Shutter Time | 1/3 s to 1/100, 000 s |
| Day & Night | IR cut filter |
| Angle Adjustment | Pan: 0° to 360°, tilt: 0° to 75°, rotate: 0° to 360° |
| **Lens** | |
| Lens Type | Fixed focal lens, 2.8 and 4 mm optional |
| Focal Length & FOV | 2.8 mm, horizontal FOV 107°, vertical FOV 57°, diagonal FOV 127°<br>4 mm, horizontal FOV 87°, vertical FOV 46°, diagonal FOV 104° |
| Lens Mount | M12 |
| Iris Type | Fixed |
| Aperture | F1.6 |
| Depth of Field | 2.8 mm: 1 m to ∞<br>4 mm: 1.2 m to ∞ |
| **DORI** | |
| DORI | 2.8 mm: D: 44 m, O: 17 m, R: 9 m, I: 4 m<br>4 mm: D: 54 m, O: 21 m, R: 11 m, I: 5 m |
| **Illuminator** | |
| Supplement Light Type | IR |
| Supplement Light Range | Up to 30 m |
| Smart Supplement Light | Yes |
| IR Wavelength | 850 nm |
| **Video** | |
| Main Stream | 50 Hz: 25 fps (1920 × 1080, 1280 × 720)<br>60 Hz: 30 fps (1920 × 1080, 1280 × 720) |
| Sub-Stream | 50 Hz: 25 fps (640 × 480, 640 × 360)<br>60 Hz: 30 fps (640 × 480, 640 × 360) |
| Third Stream | 50 Hz: 10 fps (1920 × 1080, 1280 × 720, 640 × 480, 640 × 360)<br>60 Hz: 10 fps (1920 × 1080, 1280 × 720, 640 × 480, 640 × 360),<br>*Third stream is supported under certain settings. |
| Video Compression | Main stream: H.265/H.264/H.264+/H.265+<br>Sub-stream: H.265/H.264/MJPEG<br>Third stream: H.265/H.264 |
| Video Bit Rate | 32 Kbps to 8 Mbps |
| H.264 Type | Baseline Profile, Main Profile, High Profile |
| H.265 Type | Main Profile |
| Bit Rate Control | CBR, VBR |
| Scalable Video Coding (SVC) | H.264 and H.265 encoding |
| Region of Interest (ROI) | 1 fixed region(s) for main stream and sub-stream |
| **Audio** | |
| Audio Type | -U: Mono sound |
| Audio Compression | -U: G.711/G.722.1/G.726/MP2L2/PCM/MP3/AAC-LC |

| | |
|---|---|
| Audio Bit Rate | -U: 64 Kbps (G.711ulaw/G.711alaw)/16 Kbps (G.722.1)/16 Kbps (G.726)/32 to 192 Kbps (MP2L2)/8 to 320 Kbps (MP3)/16 to 64 Kbps (AAC-LC) |
| Audio Sampling Rate | -U: 8 kHz/16 kHz/32 kHz/44.1 kHz/48 kHz |
| Environment Noise Filtering | -U: Yes |
| **Network** | |
| Protocols | TCP/IP, ICMP, HTTP, HTTPS, FTP, DHCP, DNS, DDNS, RTP, RTSP, NTP, UPnP, SMTP, IGMP, 802.1X, QoS, IPv6, UDP, Bonjour, SSL/TLS, PPPoE, SNMP, WebSocket, WebSockets |
| Simultaneous Live View | Up to 6 channels |
| API | Open Network Video Interface (Profile S, Profile G, Profile T), ISAPI, SDK, ISUP |
| Smooth Streaming | Yes |
| User/Host | Up to 32 users<br>3 user levels: administrator, operator, and user |
| Security | Password protection, complicated password, HTTPS encryption, 802.1X authentication (EAP-TLS, EAP-LEAP, EAP-MD5), watermark, IP address filter, basic and digest authentication for HTTP/HTTPS, WSSE and digest authentication for Open Network Video Interface, RTP/RTSP over HTTPS, control timeout settings, security audit log, TLS 1.3, host authentication (MAC address) |
| Network Storage | NAS (NFS, SMB/CIFS), Auto Network Replenishment (ANR),<br>Together with high-end Hikvision memory card, memory card encryption and health detection are supported. |
| Client | iVMS-4200, Hik-Connect, Hik-Central |
| Web Browser | Plug-in required live view: IE 10+<br>Plug-in free live view: Chrome 57.0+, Firefox 52.0+<br>Local service: Chrome 57.0+, Firefox 52.0+ |
| **Image** | |
| Image Parameters Switch | Yes |
| Image Settings | Rotate mode, saturation, brightness, contrast, sharpness, gain, white balance, adjustable by client software or web browser |
| Day/Night Switch | Day, Night, Auto, Schedule |
| Wide Dynamic Range (WDR) | 120 dB |
| SNR | ≥ 52 dB |
| Image Enhancement | BLC, HLC, 3D DNR |
| Privacy Mask | Yes |
| **Interface** | |
| Ethernet Interface | 1 RJ45 10 M/100 M self-adaptive Ethernet port |
| On-Board Storage | Built-in memory card slot, support microSD card, up to 256 GB |
| Built-in Microphone | -U: Yes |
| Reset Key | Yes |
| **Event** | |
| Basic Event | Motion detection (support alarm triggering by specified target types (human and vehicle)), video tampering alarm, exception |
| Smart Event | Line crossing detection, intrusion detection, region entrance detection, region exiting detection (support alarm triggered by specified target types (human and vehicle)), Face detection |

| | |
|---|---|
| Linkage | Upload to FTP/NAS/memory card, notify surveillance center, send email, trigger recording, trigger capture |
| **General** | |
| Power | 12 VDC ± 25%, 0.5 A, max. 6 W, Ø5.5 mm coaxial power plug, reverse polarity protection,<br>PoE: 802.3af, Class 3, 36 V to 57 V, 0.2 A to 0.13 A, max. 7.5 W |
| Material | Body: aluminum alloy |
| Dimension | Ø127.3 mm × 96.3 mm (Ø5" × 3.8") |
| Package Dimension | 150 mm × 150 mm × 141 mm (5.9" × 5.9" × 5.6") |
| Weight | Approx. 560 g (1.2 lb.) |
| With Package Weight | Approx. 770 g (1.7 lb.) |
| Storage Conditions | -30 °C to 60 °C (-22 °F to 140 °F). Humidity 95% or less (non-condensing) |
| Startup and Operating Conditions | -30 °C to 60 °C (-22 °F to 140 °F). Humidity 95% or less (non-condensing) |
| Language | 33 languages<br>English, Russian, Estonian, Bulgarian, Hungarian, Greek, German, Italian, Czech, Slovak, French, Polish, Dutch, Portuguese, Spanish, Romanian, Danish, Swedish, Norwegian, Finnish, Croatian, Slovenian, Serbian, Turkish, Korean, Traditional Chinese, Thai, Vietnamese, Japanese, Latvian, Lithuanian, Portuguese (Brazil), Ukrainian |
| General Function | Anti-flicker, heartbeat, password reset via e-mail, pixel counter |
| **Approval** | |
| EMC | FCC: 47 CFR Part 15, Subpart B,<br>CE-EMC: EN 55032: 2015, EN 61000-3-2:2019, EN 61000-3-3: 2013+A1:2019, EN 50130-4: 2011 +A1: 2014,<br>IC: ICES-003: Issue 7,<br>KC: KN32: 2015, KN35: 2015 |
| Safety | UL: UL 62368-1,<br>CB: IEC 62368-1: 2014+A11,<br>CE-LVD: EN 62368-1: 2014/A11: 2017 |
| Environment | CE-RoHS: 2011/65/EU,<br>WEEE: 2012/19/EU,<br>Reach: Regulation (EC) No 1907/2006 |
| Protection | IP67: IEC 60529-2013 |

## ▪ Available Model

DS-2CD2323G2-IU (2.8/4 mm)
DS-2CD2323G2-I (2.8/4 mm)
DS-2CD2323G2-IU (2.8/4mm) (Black)
DS-2CD2323G2-I (2.8/4 mm) (Black)

## ▪ Typical Application

Hikvision products are classified into three levels according to their anti-corrosion performance. Refer to the following description to choose for your using environment.

This model has NO SPECIFIC PROTECTION.

| Level | Description |
|---|---|
| Top-level protection | Hikvision products at this level are equipped for use in areas where professional anti-corrosion protection is a must. Typical application scenarios include coastlines, docks, chemical plants, and more. |
| Moderate protection | Hikvision products at this level are equipped for use in areas with moderate anti-corrosion demands. Typical application scenarios include coastal areas about 2 kilometers (1.24 miles) away from coastlines, as well as areas affected by acid rain. |
| No specific protection | Hikvision products at this level are equipped for use in areas where no specific anti-corrosion protection is needed. |

## ▪ Dimension

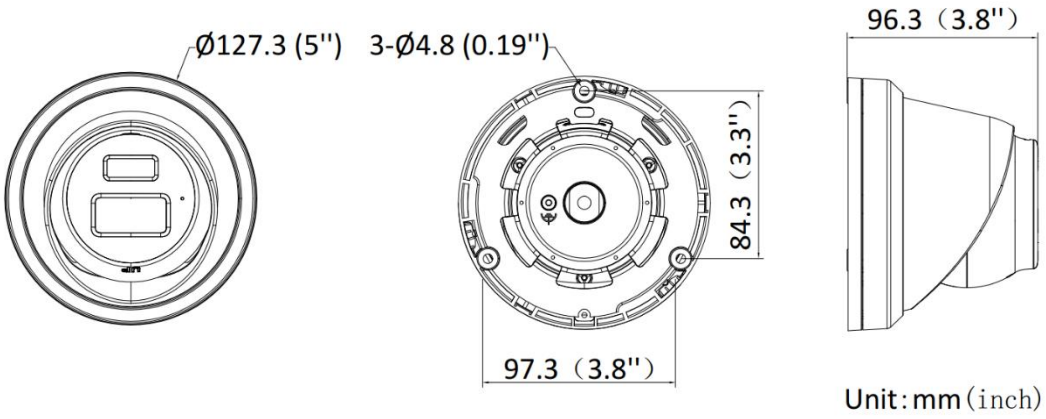


## ▪ Accessory

### ▪ Optional

| DS-1273ZJ-130-TRL Wall Mount | DS-1271ZJ-130-TRL(Black) Pendant Mount | DS-1271ZJ-130-TRL Pendant Mount | DS-1273ZJ-130-TRL(Black) Wall Mount |
|---|---|---|---|
|  |  |  |  |

Distributed by


**Headquarters**
No.555 Qianmo Road, Binjiang District,
Hangzhou 310051, China
T +86-571-8807-5998
overseasbusiness@hikvision.com

**Hikvision USA**
T +1-909-895-0400
sales.usa@hikvision.com

**Hikvision Europe**
T +31-23-5542770
sales.eu@hikvision.com

**Hikvision UK & Ireland**
T +01628-902140
sales.uk@hikvision.com

**Hikvision UAE**
T +971-4-4432090
salesme@hikvision.com

**Hikvision Russia**
T +7-495-669-67-99
saleru@hikvision.com

**Hikvision Australia**
T +61-2-8599-4233
salesau@hikvision.com

**Hikvision Italy**
T +39-0438-6902
info.it@hikvision.com

**Hikvision South Africa**
Tel: +27 (10) 0351172
sale.africa@hikvision.com

**Hikvision Singapore**
T +65-6684-4718
sg@hikvision.com

**Hikvision Korea**
T +82-(0)31-731-8817
sales.korea@hikvision.com

**Hikvision India**
T +91-22-28469900
sales@pramahikvision.com

**Hikvision Brazil**
T +55 11 3318-0050
Latam.support@hikvision.com

**Hikvision France**
T +33(0)1-85-330-450
info.fr@hikvision.com

**Hikvision Spain**
T +34-91-737-16-55
info.es@hikvision.com

**Hikvision Poland**
T +48-22-460-01-50
info.pl@hikvision.com

**Hikvision Canada**
T +1-866-200-6690
sales.canada@hikvision.com

**Hikvision Turkey**
T +90 (216)521 7070- 7074
sales.tr@hikvision.com

**Hikvision Kazakhstan**
T +7-727-9730667
nikia.panfilov@hikvision.ru

**Hikvision Tashkent**
T +99-87-1238-9438
uzb@hikvision.ru

**Hikvision Indonesia**
T +62-21-2933759
Sales.Indonesia@hikvision.com

**Hikvision Thailand**
T +662-275-9949
sales.thailand@hikvision.com

**Hikvision Malaysia**
T +601-7652-2413
sales.my@hikvision.com

**Hikvision Vietnam**
T +84-974270888
sales.vt@hikvision.com

**Hikvision Hong Kong**
T +852-2151-1761
info.hk@hikvision.com

**Hikvision Colombia**
sales.colombia@hikvision.com


© Hikvision Digital Technology Co., Ltd. 2020 | Data subject to change without notice |

05070020220531