# DS-2CD2187G3-LI(S2U)Y

## 8 MP Smart Hybrid Light ColorVu Fixed Dome Network Camera







Hikvision ColorVu technology provides 24/7 vivid colorful images with F1.0 advanced lenses, high performance sensors and friendly lighting. F1.0 super-aperture collects more light to produce brighter images. Advanced sensor technology can vastly improve the utilization of available light.

- HikAI-ISP for excellent noise reduction effect
- 24/7 colorful imaging via ColorVu technology
- Focus on Person and Vehicle classification based on deep learning
- Scene-adaptive WDR
- -S2U: Built-in arrayed dual-microphone for real-time high quality audio security
- Smart Hybrid Light: Integrates IR and White lights, 3 supplemental lighting modes
- Anti-corrosion design, providing reliability and longevity compared to standard (NEMA4X)
- Water and dust resistant (IP67) and vandal-resistant (IK10)

## ▪ Specification

| | |
|---|---|
| **Camera** | |
| Image Sensor | 1/1.8" Progressive Scan CMOS |
| Max. Resolution | 3840 × 2160 |
| Min. Illumination | Color: 0.0005 Lux @ (F1.0, AGC ON), 0 Lux with light |
| Shutter Time | 1 s to 1/100,000 s |
| Day & Night | IR cut filter |
| Angle Adjustment | Pan: 0° to 355°, tilt: 0° to 75°, rotate: 0° to 355° |
| **Lens** | |
| Lens Type | Fixed focal lens, 2.8 and 4 mm optional |
| Focal Length & FOV | 2.8 mm, horizontal FOV 108.8°, vertical FOV 56.4°, diagonal FOV 134.3°<br>4 mm, horizontal FOV 93.3°, vertical FOV 47.2°, diagonal FOV 114.2° |
| Lens Mount | M16 |
| Iris Type | Fixed |
| Aperture | F1.0 |
| Depth of Field | 2.8 mm: 3.3 m to ∞<br>4 mm: 3.8 m to ∞ |
| **DORI** | |
| DORI | 2.8 mm: D: 89 m, O: 35 m, R: 17 m, I: 8 m<br>4 mm: D: 109 m, O: 43 m, R: 21 m, I: 10 m |
| **Illuminator** | |
| Supplement Light Type | White Light, IR |
| Supplement Light Range | Up to 30 m |
| Smart Supplement Light | Yes |
| IR Wavelength | 850 nm |
| **Video** | |
| Main Stream | 50 Hz:<br>25 fps (3840 × 2160, 3200 × 1800, 2688 × 1520, 1920 × 1080, 1280 × 720)<br>60 Hz:<br>30 fps (3840 × 2160， 3200 × 1800, 2688 × 1520, 1920 × 1080, 1280 × 720) |
| Sub-Stream | 50 Hz: 25 fps (1280 × 720, 640 × 480, 640 × 360)<br>60 Hz: 30 fps (1280 × 720, 640 × 480, 640 × 360) |
| Third Stream | 50 Hz: 10 fps (1920 × 1080, 1280 × 720, 640 × 480, 640 × 360)<br>60 Hz: 10 fps (1920 × 1080, 1280 × 720, 640 × 480, 640 × 360)<br>*Third stream is supported under certain settings. |
| Video Compression | Main stream: H.265/H.264/H.264+/H.265+,<br>Sub-stream: H.265/H.264/MJPEG,<br>Third stream: H.265/H.264,<br>*Third stream is supported under certain settings. |
| Video Bit Rate | 32 Kbps to 16 Mbps |
| H.264 Type | Baseline Profile, Main Profile, High Profile |
| H.265 Type | Main Profile |
| Bit Rate Control | CBR, VBR |
| Scalable Video Coding (SVC) | H.264 and H.265 encoding |
| Region of Interest (ROI) | 1 fixed region for main stream |

| | |
|---|---|
| **Audio** | |
| Audio Type | -2U: Mono sound |
| Audio Bit Rate | -2U: 64 Kbps (G.711ulaw/G.711alaw)/16 Kbps (G.722.1)/16 Kbps (G.726)/16 Kbps to 64 Kbps (AAC-LC)/32 to 192 Kbps (MP2L2)/8 to 320 Kbps (MP3) |
| Audio Compression | -2U: G.711/G.722.1/G.726/MP2L2/PCM/MP3/AAC-LC |
| Audio Sampling Rate | -2U: 8 kHz/16 kHz/32 kHz/48 kHz |
| Environment Noise Filtering | -2U: Yes |
| **Network** | |
| Protocols | TCP/IP, ICMP, HTTP, HTTPS, FTP, DHCP, DNS, DDNS, RTP, RTSP, RTCP, NTP, UPnP, SMTP, IGMP, 802.1X, QoS, IPv4, IPv6, UDP, Bonjour, SSL/TLS, PPPoE, SNMP, WebSocket, WebSockets, SRTP, SFTP |
| Simultaneous Live View | Up to 6 channels |
| API | ONVIF (Profile S, Profile G, Profile T), ISAPI, SDK, ISUP |
| User/Host | Up to 32 users<br>3 user levels: administrator, operator, and user |
| Security | Password protection, complicated password, HTTPS encryption, 802.1X authentication (EAP-TLS, EAP-LEAP, EAP-MD5), watermark, IP address filter, basic and digest authentication for HTTP/HTTPS, WSSE and digest authentication for Open Network Video Interface, RTP/RTSP over HTTPS, control timeout settings, security audit log, TLS 1.1/1.2/1.3, host authentication (MAC address) |
| Network Storage | NAS (NFS, SMB/CIFS), Auto Network Replenishment (ANR) |
| Client | iVMS-4200, Hik-Connect, Hik-Central |
| Web Browser | Plug-in free live view: Chrome 80+, Firefox 80+, Edge 89+,<br>Local service: Chrome 80+, Firefox 80+, Edge 89+ |
| **Image** | |
| Image Parameters Switch | Yes |
| Image Settings | Rotate mode, saturation, brightness, contrast, sharpness, gain, white balance, adjustable by client software or web browser |
| Day/Night Switch | Day, Night, Auto, Schedule |
| Image Enhancement | BLC, HLC, 3D DNR, Distortion Correction, Defog |
| SNR | ≥ 52 dB |
| Wide Dynamic Range (WDR) | 130 dB |
| Image Stabilization | EIS |
| Privacy Mask | 4 programmable polygon privacy masks |
| **Interface** | |
| Ethernet Interface | 1 RJ45 10 M/100 M self-adaptive Ethernet port |
| On-Board Storage | Built-in memory card slot, support microSD/microSDHC/microSDXC card, up to 512 GB |
| Audio | -S2U models support:<br>Built-in Microphone: Arrayed dual-microphone<br>1 input (line in), two-core terminal block, max. input amplitude: 3.3 Vpp, input impedance: 4.7 KΩ, interface type: non-equilibrium,<br>1 output (line out), two-core terminal block, max. output amplitude: 3.3 Vpp, output impedance: 100 Ω, interface type: non-equilibrium |
| Alarm | -S: 1 input, 1 output (max. 24 VAC/VDC, 1A) |
| Reset Key | Yes |

| | |
|---|---|
| **Event** | |
| Basic Event | Motion detection (support alarm triggering by specified target types (human and vehicle)), video tampering alarm, exception |
| Linkage | Upload to FTP/NAS/memory card, notify surveillance center, trigger recording, trigger capture, send email, -S model: trigger alarm output |
| Smart Event | Scene change detection |
| **Deep Learning Function** | |
| Face Capture | Yes |
| Perimeter Protection | Line crossing, intrusion, region entrance, region exiting<br>Support alarm triggering by specified target types (human and vehicle) |
| **General** | |
| Power | 12 VDC ± 25%, 0.75 A, max. 9 W, Ø5.5 mm coaxial power plug, reverse polarity protection,<br>PoE: IEEE 802.3af, Class 3, max. 10.5 W |
| Material | Base: aluminum alloy, cover: aluminum alloy |
| Dimension | Ø121.5 mm × 97.6 mm (Ø4.78" × 3.84") |
| Package Dimension | 234 mm × 120 mm × 117 mm (9.2" × 4.7" × 4.6") |
| Weight | Approx. 600 g (1.3 lb.) |
| With Package Weight | Approx. 825 g (1.8 lb.) |
| Storage Conditions | -30 °C to 60 °C (-22 °F to 140 °F). Humidity 95% or less (non-condensing) |
| Startup and Operating Conditions | -30 °C to 60 °C (-22 °F to 140 °F). Humidity 95% or less (non-condensing) |
| General Function | Heartbeat, mirror, flash log, password reset via email, pixel counter, anti-banding |
| Language | 33 languages: English, Russian, Estonian, Bulgarian, Hungarian, Greek, German, Italian, Czech, Slovak, French, Polish, Dutch, Portuguese, Spanish, Romanian, Danish, Swedish, Norwegian, Finnish, Croatian, Slovenian, Serbian, Turkish, Korean, Traditional Chinese, Thai, Vietnamese, Japanese, Latvian, Lithuanian, Portuguese (Brazil), Ukrainian |
| **Approval** | |
| EMC | CE-EMC: EN 55032:2015+A1:2020, EN 50130-4:2011+A1:2014, EN IEC 61000-3-2:2019+A1:2021, EN 61000-3-3:2013+A1:2019+A2:2021,<br>RCM: AS/NZS CISPR 32: 2015,<br>IC: ICES-003: Issue 7,<br>KC: KN32: 2015, KN35: 2015 |
| Safety | UL: UL 62368-1,<br>CB: IEC 62368-1: 2014+A11,<br>CE-LVD: EN 62368-1: 2014/A11: 2017,<br>BIS: IS 13252 (Part 1): 2010/IEC 60950-1: 2005 |
| Environment | CE-RoHS: 2011/65/EU,<br>WEEE: 2012/19/EU,<br>Reach: Regulation (EC) No 1907/2006 |
| Protection | IP67: IEC 60529-2013, IK10: IEC 62262:2002 |
| Anti-Corrosion Protection | NEMA 4X (NEMA 250-2018) |

## ▪ Typical Application

Hikvision products are classified into three levels according to their anti-corrosion performance. Refer to the following description to choose for your using environment.

This model has MODERATE PROTECTION.

| Level | Description |
|---|---|
| Top-level protection | Hikvision products at this level are equipped for use in areas where professional anti-corrosion protection is a must. Typical application scenarios include coastlines, docks, chemical plants, and more. |
| Moderate protection | Hikvision products at this level are equipped for use in areas with moderate anti-corrosion demands. Typical application scenarios include coastal areas about 2 kilometers (1.24 miles) away from coastlines, as well as areas affected by acid rain. |
| No specific protection | Hikvision products at this level are equipped for use in areas where no specific anti-corrosion protection is needed. |

## ▪ Available Model

DS-2CD2187G3-LIS2UY(2.8mm)
DS-2CD2187G3-LIS2UY(4mm)
DS-2CD2187G3-LIS2UY(2.8mm)(Black)
DS-2CD2187G3-LIY(2.8mm)
DS-2CD2187G3-LIY(4mm)

## ▪ Dimension

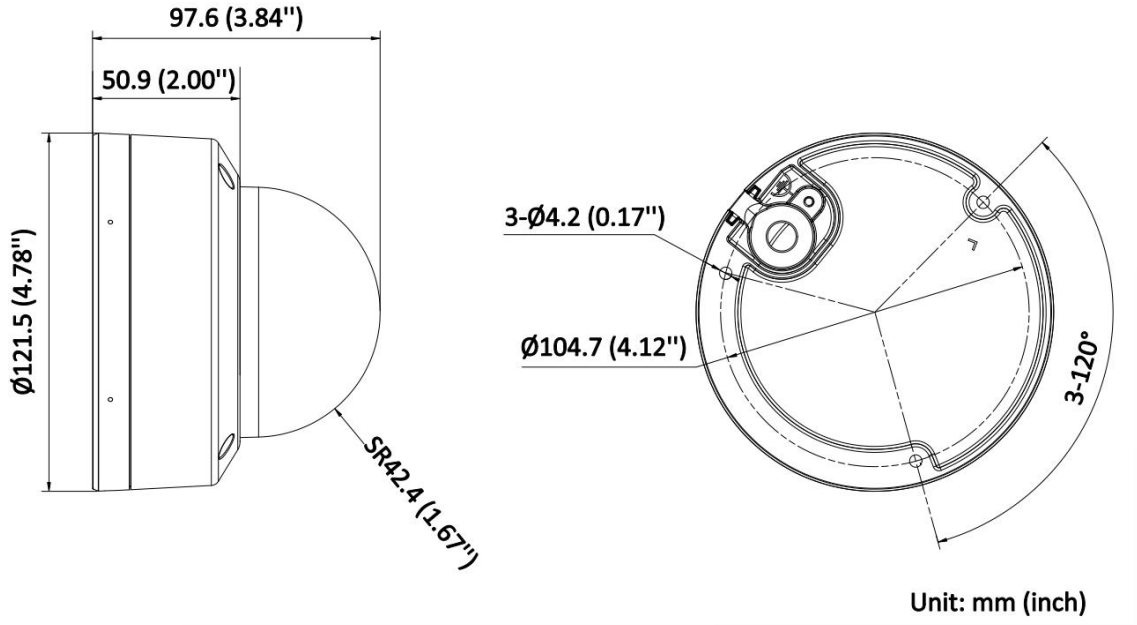

## ▪ Accessory

### ▪ Optional

| DS-1272ZJ-120<br>Wall mount | DS-1272ZJ-120B<br>Wall mount | DS-1271ZJ-120<br>Pendant Mount | DS-1275ZJ-SUS<br>Vertical pole mount | DS-1276ZJ-SUS<br>Corner mount |
|---|---|---|---|---|
|  |  |  |  |  |
|  |  |  | 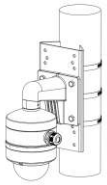 |  |
| **DS-1280ZJ-DM46**<br>**Junction box** | **DS-2280ZJ-WA120**<br>**Junction box** | **DS-2210ZJ-WA-120**<br>**Pendant Mount** | **DS-2200ZJ-WA-120**<br>**Wall mount** | **DS-2200ZJ-WAJ-120**<br>**Wall mount** |
|  |  |  |  |  |
| 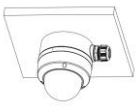 | 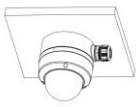 |  |  |  |

See Far, Go Further

www.hikvision.com
support@hikvision.com

© Hangzhou Hikvision Digital Technology Co., Ltd. Unless otherwise agreed, Hikvision makes no warranties, express or implied. We reserve the right to introduce modifications without notice.

HIKVISION®