iDS-2CD5387G2/V-XS

8MP DeepinViewX Fixed Lens Turret Camera for Perimeter Protection



Hikvision has been dedicated to develop products with security since established.
Hikvision always follows security by design principle and has adopted many methods of security technologies into our product development lifecycle, including terminal security, data security, application security, network security, and privacy protection.
In the meantime, the security technologies used by Hikvision are all in compliance with local applicable laws and safety regulations. These security measures could enhance product's cyber security protection capability and protect your devices as well as your data from malicious cyber attacks.

- High quality imaging with 8 MP resolution
- Excellent low-light performance via Darkfighter2.0 technology
- Efficient H.265+ compression technology to save bandwidth and storage
- Water and dust resistant (IP67)
- Dedicated large scale AI model for perimeter protection, reduce false alarms by 90% compared to conventional AI cameras

▪ Function

Perimeter Protection

With embedded deep learning based target detection and classification algorithms, the camera carries out the duty of perimeter protection, monitoring the actions of line crossing, intrusion, region entrance, and region exiting. The algorithms greatly filter out the mistaken alarm caused by the interference of leafs, lights, animal, flag, etc.

▪ Specification

Camera	
Image Sensor	1/1.8" Progressive Scan CMOS
Max. Resolution	3840 × 2160
Min. Illumination	Color: 0.002 Lux @ (F1.0, AGC ON),B/W: 0.0002 Lux @ (F1.0, AGC ON),B/W: 0 Lux with IR
Shutter Time	1 s to 1/100,000 s
Day & Night	IR cut filter, Blue glass module (less ghost phenomenon)
Angle Adjustment	Pan: 0° to 355°,tilt: 0° to 65°,rotate: 0° to 360°
Lens	
Focal Length & FOV	2.8 mm, horizontal FOV 108.8°, vertical FOV 56.4°, diagonal FOV 134.3° 4 mm, horizontal FOV 93.0°, vertical FOV 47°, diagonal FOV 114°
Lens Type	Fixed focal lens, 2.8 and 4 mm optional
Iris Type	Fixed
Aperture	F1.0
DORI	
DORI	2.8 mm: D (Detect) : 89.2 m, O (Observe) : 35.4 m, R(Recognize) : 17.8 m, I(Identify) : 8.9 m 4 mm: D (Detect) : 104.6 m, O(Observe): 41.5 m, R(Recognize) : 20.9 m, I(Identify) : 10.5 m The DORI values are calculated using pixel densities for different use cases as recommended by the EN 62676-4 standard.
Illuminator	
Supplement Light Type	Hybrid (IR and White Light)
Supplement Light Range	Up to 40 m
Smart Supplement Light	Yes
IR Wavelength	850 nm
Video	
Main Stream	50 Hz: 25 fps (3840 × 2160, 3072 × 1728, 2560 × 1440, 1920 × 1080, 1280 × 720) 60 Hz: 30 fps (3840 × 2160, 3072 × 1728, 2560 × 1440, 1920 × 1080, 1280 × 720)
Sub-Stream	50 Hz: 25 fps (704 × 576, 640 × 480) 60 Hz: 30 fps (704 × 480, 640 × 480)
Third Stream	50 Hz: 25 fps (1920 × 1080, 1280 × 720, 704 × 576, 640 × 480) 60 Hz: 30 fps (1920 × 1080, 1280 × 720, 704 × 480, 640 × 480)
Fourth Stream	50 Hz: 25 fps (704 × 576, 640 × 480) 60 Hz: 30 fps (704 × 480, 640 × 480)
Video Compression	Main stream: H.265+/H.265/H.264+/H.264, Sub-stream: H.265/H.264/MJPEG, Third stream: H.265/H.264, Fourth stream: H.265/H.264/MJPEG
Video Bit Rate	32 Kbps to 16 Mbps
H.264 Type	Baseline Profile,Main Profile,High Profile
H.265 Type	Main Profile
Bit Rate Control	CBR,VBR

Scalable Video Coding (SVC)	H.264 and H.265 encoding
Target Cropping	No
Region of Interest (ROI)	4 fixed regions for each stream
Audio	
Audio Type	Mono sound
Audio Compression	G.711/G.722.1/G.726/MP2L2/PCM/MP3/AAC-LC
Audio Bit Rate	64 Kbps (G.711ulaw/G.711alaw)/16 Kbps (G.722.1)/16 Kbps (G.726)/32 to 192 Kbps (MP2L2)/8 to 320 Kbps (MP3)/16 to 64 Kbps (AAC-LC)
Audio Sampling Rate	8 kHz/16 kHz/32 kHz/48 kHz
Environment Noise Filtering	Yes
Network	
Protocols	TCP/IP, ICMP, HTTP, HTTPS, FTP, SFTP, DHCP, DNS, DDNS, SRTP, RTP, RTSP, RTCP, PPPoE, NTP, UPnP, SMTP, SNMP, IGMP, 802.1X, QoS, IPv4/IPv6, UDP, Bonjour, SSL/TLS, ARP, WebSocket, WebSockets
Simultaneous Live View	Up to 20 channels
API	Open Network Video Interface (Profile S, Profile G, Profile T),ISAPI,SDK,ISUP
User/Host	Up to 32 users 3 user levels: administrator, operator, and user
Security	Password protection, complicated password, HTTPS encryption, 802.1X authentication (EAP-TLS, EAP-LEAP, EAP-MD5), watermark, IP address filter, basic and digest authentication for HTTP/HTTPS, WSSE and digest authentication for Open Network Video Interface, RTP/RTSP OVER HTTPS, Control Timeout Settings, Security Audit Log, TLS 1.2, TLS 1.3,AES128/256
Network Storage	NAS (NFS, SMB/CIFS),Auto Network Replenishment (ANR), Together with high-end Hikvision memory card, memory card encryption and health detection are supported.
Client	iVMS-4200,Hik-Connect
Web Browser	Plug-in required live view: IE 10, IE 11, Plug-in free live view: Chrome 57.0+, Firefox 52.0+, Edge 89+, Safari 11+, Local service: Chrome 57.0+, Firefox 52.0+, Edge 89+
Image	
Image Parameters Switch	Yes
Day/Night Switch	Day,Night,Auto,Schedule,Alarm Trigger
Image Settings	Rotate mode,saturation,brightness,contrast,sharpness,gain,white balance,adjustable by client software or web browser
Wide Dynamic Range (WDR)	120 dB
Image Enhancement	BLC,HLC,3D DNR,Defog,Distortion Correction
Privacy Mask	8 programmable polygon privacy masks
Picture Overlay	LOGO picture can be overlaid on video with 128 × 128 24 bit bmp format.
Image Stabilization	EIS
Interface	
Ethernet Interface	1 RJ45 10 M/100 M self-adaptive Ethernet port
On-Board Storage	Built-in memory card slot, support microSD/microSDHC/microSDXC card, up to 1 TB
Built-in Microphone	2 built-in microphones
Alarm	1 input, 1 output (max. 24 VDC/24 VAC, 1 A)

Audio	1 input (line in), input amplitude: 3.3 Vpp, input impedance: 4.7 KΩ, interface type: non-equilibrium, 1 output (line out), output amplitude: 3.3 Vpp, output impedance: 100 Ω, interface type: non-equilibrium, mono sound
Built-in Speaker	1 built-in speaker
Reset Key	Yes
Power Output	12 VDC, max. 100 mA External extension cord less than 10 meters.
RS-485	1 RS-485 (Half duplex, HIKVISION, Pelco-P, Pelco-D, self-adaptive)
Event	
Basic Event	Motion detection (support alarm triggering by specified target types (human and vehicle)),video tampering alarm,exception (HDD full, HDD error, network disconnected, IP address conflict, illegal login, abnormal restart),alarm input and output,video quality diagnosis
Smart Event	Scene change detection,audio exception detection,defocus detection, unattended baggage detection, object removal detection, loitering detection, people gathering detection, fast moving detection, parking detection
Linkage	Upload to FTP/NAS/memory card,notify surveillance center,send email,trigger alarm output,trigger recording,trigger capture,audible warning
Deep Learning Function	
Perimeter Protection	Line crossing, intrusion, region entrance, region exiting Support alarm triggering by specified target types (human and vehicle) Support combined event alarm triggering Dedicated large scale AI model for perimeter protection, reduce false alarms by 90% compared to conventional AI cameras VCA range: up to 40 m (nighttime)
Metadata	Intrusion detection,line crossing detection,region entrance detection,region exiting detection
AcuSeek	Support search for humans, vehicles, This function requires use with AcuSeek NVR/Servers.
General	
Power	12 VDC ± 20%, 0.93 A, max. 11.2 W, PoE: IEEE 802.3at, Type 2, Class 4, 42.5 V to 57 V, 0.25 A to 0.19 A, max. 12.7 W
Material	Aluminum alloy body
Dimension	Ø138.63 mm × 123.42 mm (Ø5.46" × 4.86")
Package Dimension	170 mm × 170 mm × 150 mm (6.7" × 6.7" × 6.0")
Weight	Approx. 820 g (1.81 lb.)
With Package Weight	Approx. 1095 g (2.42 lb.)
Storage Conditions	-30 °C to 60 °C (-22 °F to 140 °F). Humidity 95% or less (non-condensing)
Startup and Operating Conditions	-30 °C to 60 °C (-22 °F to 140 °F). Humidity 95% or less (non-condensing)
Language	33 languages: English, Russian, Estonian, Bulgarian, Hungarian, Greek, German, Italian, Czech, Slovak, French, Polish, Dutch, Portuguese, Spanish, Romanian, Danish, Swedish, Norwegian, Finnish, Croatian, Slovenian, Serbian, Turkish, Korean, Traditional Chinese, Thai, Vietnamese, Japanese, Latvian, Lithuanian, Portuguese (Brazil), Ukrainian
General Function	Heartbeat,anti-banding,one-key reset,mirror,password protection,flash log
Integrated Connector Panel	No

Approval	
EMC	CE-EMC: EN 55032:2015+A1:2020, EN 50130-4:2011+A1:2014, EN IEC 61000-3-2:2019+A1:2021, EN 61000-3-3:2013+A1:2019+A2:2021, RCM: AS/NZS CISPR 32: 2015
Safety	CB: IEC 62368-1: 2014+A11, CE-LVD: EN 62368-1: 2014/A11: 2017
Protection	IP67: IEC 60529-2013
Environment	CE-RoHS: 2011/65/EU, WEEE: 2012/19/EU, Reach: Regulation (EC) No 1907/2006
Transport Certification	IATA Dangerous Goods Regulations, Dangerous Goods List, International Maritime Dangerous Goods Code, Railway Dangerous Goods List

▪ Typical Application

Hikvision products are classified into three levels according to their anti-corrosion performance. Refer to the following description to choose for your using environment.

This model has NO SPECIFIC PROTECTION.

Level	Description
Top-level protection	Hikvision products at this level are equipped for use in areas where professional anti-corrosion protection is a must. Typical application scenarios include coastlines, docks, chemical plants, and more.
Moderate protection	Hikvision products at this level are equipped for use in areas with moderate anti-corrosion demands. Typical application scenarios include coastal areas about 2 kilometers (1.24 miles) away from coastlines, as well as areas affected by acid rain.
No specific protection	Hikvision products at this level are equipped for use in areas where no specific anti-corrosion protection is needed.

▪ Available Model

iDS-2CD5387G2/V-XS(2.8mm)

iDS-2CD5387G2/V-XS(4mm)

▪ Dimension

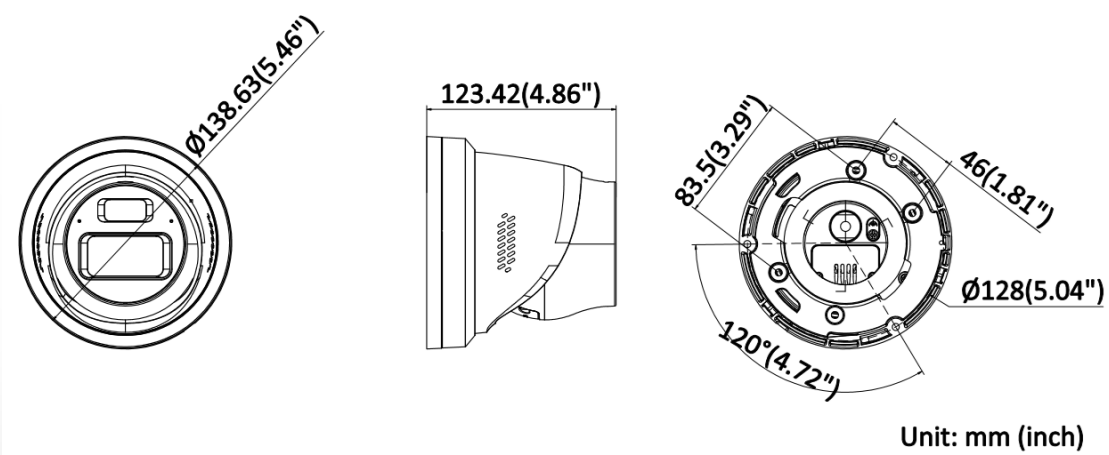

▪ Accessory

▪ Optional

DS-2210ZJ-WA-140	DS-1280ZJ-PT6	DS-1275ZJ-SUS	DS-1276ZJ-SUS	DS-2200ZJ-WAJ-140
				
DS-1273ZJ-140B	**DS-2200ZJ-WA-140**	**DS-2280ZJ-WA140**	**DS-1271ZJ-140**	**DS-1273ZJ-140**
		无法显示链接的图像。该文件可能已被移动、重命名或删除。请验证该链接是否指向正确的文件和位...		

▪ Installation Methods

Pendant Mounting DS-2210ZJ-WA-140	Pendant Mounting DS-1271ZJ-140	Junction Box DS-1280ZJ-PT6	Junction Box DS-2280ZJ-WA140	Vertical Pole Mounting DS-1275ZJ-SUS+DS-2200ZJ-WAJ-140
				
Corner Mounting DS-1276ZJ-SUS+DS-1273ZJ-140+DS-1280ZJ-PT6	**Wall Mounting DS-2200ZJ-WAJ-140**	**Wall Mounting DS-1273ZJ-140B**	**Wall Mounting DS-2200ZJ-WA-140**	**Wall Mounting DS-1273ZJ-140**
				

See Far, Go Further

www.hikvision.com
support@hikvision.com

© Hangzhou Hikvision Digital Technology Co., Ltd. Unless otherwise agreed, Hikvision makes no warranties, express or implied. We reserve the right to introduce modifications without notice.

HIKVISION®