iDS-2CD7146G2-IZ(H)S(Y)(1T)
4 MP DeepinView Moto Varifocal Dome Camera

DeepinView series





Hikvision has been dedicated to develop products with security since established. Hikvision always follows security by design principle and has adopted many methods of security technologies into our product development lifecycle, including terminal security, data security, application security, network security, and privacy protection. In the meantime, the security technologies used by Hikvision are all in compliance with local applicable laws and safety regulations. These security measures could enhance product's cyber security protection capability and protect your devices as well as your data from malicious cyber attacks.

- High quality imaging with 4 MP resolution
- Excellent low-light performance via DarkFighter 2.0 technology
- Capture vehicles and humans of different speed clearly via ShotN technology
- Clear imaging against strong back light due to 150 dB AWDR technology
- Efficient H.265+ compression technology to save bandwidth and storage
- 5 streams to meet a wide variety of applications
- Water and dust resistant (IP67), vandal proof (IK10) and corrosion resistant (NEMA 4X, optional)
- High frame rate, up to 2MP@120fps and 4MP@60fps
- Built-in dual-mic and speaker for real-time audio security
- Built in 1 TB SSD for edge storage (optional)
- Built-in G-sensor for vibration detection
- Built-in power meter for voltage exception alarm and historical power statistics

▪ Function

Face Capture

With embedded deep learning based algorithms, the camera is able to give the best shot of a target face through detecting, capturing, grading and selecting. The camera uses face exposure function to dynamically adjust face area exposure of captures and ensures high face picture quality.

Multi-Target-Type Detection

With the embedded deep learning algorithms, the camera detects and captures the face, human body, vehicle in the specified region.

▪ Specification

Camera	
Image Sensor	1/1.8" Progressive Scan CMOS
Max. Resolution	2688 × 1520
Min. Illumination	Color: 0.0005 Lux @ (F1.2, AGC ON),B/W: 0.0001 Lux @ (F1.2, AGC ON),B/W: 0 Lux with IR
Shutter Time	1 s to 1/100,000 s
Day & Night	IR cut filter,Blue glass module (less ghost phenomenon)
Angle Adjustment	Pan: 0° to 355°,tilt: 0° to 75°,rotate: 0° to 355°
Lens	
Lens Type	Varifocal lens, motorized lens, 2.8 to 12 mm and 8 to 32 mm optional
Focal Length & FOV	2.8 to 12 mm: horizontal FOV 114.6° to 41.8°, vertical FOV 59.3° to 23.6°, diagonal FOV 141.3° to 48.1° 8 to 32 mm: horizontal FOV 42.5° to 15.2°, vertical FOV 23.4° to 8.7°, diagonal FOV 49.7° to 17.3°
Focus	Auto,Semi-auto,Manual
Iris Type	P-iris
Aperture	2.8 to 12 mm: F1.38 to F2.53, 8 to 32 mm: F1.7 to F1.73
DORI	
DORI	2.8 to 12 mm: D (Detect): 149.0 m, O (Observe): 59.1 m, R (Recognize): 29.8 m, I (Identify): 14.9 m 8 to 32 mm: D (Detect): 400 m, O (Observe): 158.7 m, R (Recognize): 80 m, I (Identify): 40 m
Illuminator	
Supplement Light Type	IR
Supplement Light Range	2.8 to 12 mm: Monitoring: 40 m; 8 to 32 mm: Monitoring: 60 m
Smart Supplement Light	Yes
IR Wavelength	850 nm
Video	
Main Stream	50 Hz: 100 fps (1920 × 1080) 50 fps (2688 × 1520, 2560 × 1440, 1280 × 720) 60 Hz: 120 fps (1920 × 1080) 60 fps (2688 × 1520, 2560 × 1440, 1280 × 720)
Sub-Stream	50 Hz: 25 fps (704 × 576, 640 × 480) 60 Hz: 30 fps (704 × 480, 640 × 480)
Third Stream	50 Hz: 25 fps (1920 × 1080, 1280 × 720, 704 × 576, 640 × 480) 60 Hz: 30 fps (1920 × 1080, 1280 × 720, 704 × 480, 640 × 480)
Fourth Stream	50 Hz: 25 fps (704 × 576, 640 × 480) 60 Hz: 30 fps (704 × 480, 640 × 480)
Fifth Stream	50 Hz: 25 fps (704 × 576, 640 × 480) 60 Hz: 30 fps (704 × 480, 640 × 480)

Video Compression	Main stream: H.265+/H.265/H.264+/H.264, Sub-stream: H.265/H.264/MJPEG, Third stream: H.265/H.264, Fourth stream: H.265/H.264/MJPEG, Fifth stream: H.265/H.264/MJPEG
Video Bit Rate	32 Kbps to 8 Mbps
H.264 Type	Baseline Profile,Main Profile,High Profile
H.265 Type	Main Profile
Bit Rate Control	CBR,VBR
Scalable Video Coding (SVC)	H.264 and H.265 encoding
Region of Interest (ROI)	4 fixed regions for each stream
Target Cropping	Yes
e-PTZ	Support Patrol and Auto Tracking settings
Audio	
Audio Type	Mono sound
Audio Compression	G.711/G.722.1/G.726/MP2L2/PCM/MP3/AAC-LC
Audio Bit Rate	64 Kbps (G.711ulaw/G.711alaw)/16 Kbps (G.722.1)/16 Kbps (G.726)/32 to 192 Kbps (MP2L2)/8 to 320 Kbps (MP3)/16 to 64 Kbps (AAC-LC)
Audio Sampling Rate	8 kHz/16 kHz/32 kHz/48 kHz
Environment Noise Filtering	Yes
Network	
Protocols	TCP/IP, ICMP, HTTP, HTTPS, FTP, SFTP, SRTP, DHCP, DNS, DDNS, RTP, RTSP, RTCP, PPPoE, NTP,UPnP, SMTP, SNMP, IGMP, 802.1X, QoS, IPv4, IPv6, UDP, Bonjour, SSL/TLS, WebSocket, WebSockets
Simultaneous Live View	Up to 20 channels
API	ISAPI,SDK,ISUP,OTAP,ONVIF (Profile S, Profile G, Profile T, Profile M)
User/Host	Up to 32 users 3 user levels: administrator, operator, and user
Security	Password protection, complicated password, HTTPS encryption, 802.1X authentication (EAP-TLS, EAP-LEAP, EAP-MD5), watermark, IP address filter, basic and digest authentication for HTTP/HTTPS, WSSE and digest authentication for Open Network Video Interface, RTP/RTSP OVER HTTPS, Control Timeout Settings, Security Audit Log, TLS 1.2, TLS 1.3, TPM 2.0 (FIPS 140-2 level 2), AES128/256
Client	iVMS-4200,Hik-Connect,Hik-Central
Web Browser	Plug-in required live view: IE 10, IE 11, Plug-in free live view: Chrome 57.0+, Firefox 52.0+, Edge 89+, Safari 11+, Local service: Chrome 57.0+, Firefox 52.0+, Edge 89+
Network Storage	NAS (NFS, SMB/CIFS),Auto Network Replenishment (ANR), Together with high-end Hikvision memory card, memory card encryption and health detection are supported.
Image	
Image Parameters Switch	Yes
Image Settings	Rotate mode,saturation,brightness,contrast,sharpness,white balance,AGC,adjustable by client software or web browser
Day/Night Switch	Day,Night,Auto,Schedule,Alarm Trigger
Wide Dynamic Range (WDR)	150 dB

Image Enhancement	BLC,HLC,3D DNR,Distortion Correction,Defog
Privacy Mask	8 programmable polygon privacy masks
SNR	≥ 52 dB
Picture Overlay	LOGO picture can be overlaid on video with 128 × 128 24 bit bmp format.
Image Stabilization	EIS
Interface	
Video Output	1 Vp-p Composite Output (75 Ω/CVBS) (Only for debugging)
Ethernet Interface	1 RJ45 10 M/100 M/1000 M self-adaptive Ethernet port
On-Board Storage	Built-in memory card slot, support microSD/microSDHC/microSDXC card, up to 1 TB, With -1T: Built-in 1 TB SSD storage (1 TB device model supports)
Built-in Microphone	Yes, 2 built-in microphones
Built-in Speaker	Max. power consumption: 1.5 W, max. sound pressure level: 98 dB, speaker range: 10 m
Audio	1 input (line in), 3.5 mm connector, three-contact, max. input amplitude: 3.3 Vpp, input impedance: 4.7 KΩ, interface type: non-equilibrium, 1 output (line out), 3.5 mm connector, three-contact, max. output amplitude: 3.3 Vpp, output impedance: 100 Ω, interface type: non-equilibrium, mono sound
Alarm	2 inputs, 2 outputs (max. 24 VDC/24 VAC, 1 A)
RS-485	1 RS-485 (Half duplex, HIKVISION, Pelco-P, Pelco-D, self-adaptive)
Reset Key	Yes
Power Output	12 VDC, max. 100 mA
Event	
Basic Event	Motion detection (support alarm triggering by specified target types (human and vehicle)),video tampering alarm,video quality diagnosis,exception (network disconnected, IP address conflict, illegal login, abnormal restart, HDD full, HDD error),vibration detection
Smart Event	scene change detection,audio exception detection,defocus detection
Linkage	Upload to FTP/NAS/memory card,notify surveillance center,send email,trigger alarm output,trigger recording,trigger capture,audible warning
Deep Learning Function	
Multi-target-type Detection	Supports simultaneous detection and capture of human body, face, and vehicle, Gets 7 face features, Gets 13 human body features, Gets 2 vehicle features, Supports counting the number of line crossing targets by type, including human body, non-motor vehicle, motor vehicle, Supports dynamic mosaic mask
Face Capture	Detects up to 120 faces simultaneously, captures up to 40 face pictures per frame simultaneously and uploads up to 10 face pictures per second, Supports swing left and right from -60° to 60°, tilt up and down from -30° to 30°, Uploads face with background and closed-up face pictures, Supports best shot and quick shot for capture mode, Supports dynamic mosaic mask, Gets 7 face features
Face Comparison	Up to 10 face libraries. 30,000 faces for each library. 150,000 faces in total, Supports face library encryption

Perimeter Protection	Line crossing, intrusion, region entrance, region exiting Support alarm triggering by specified target types (human and vehicle) Support combined event alarm triggering
General	
Power	With -1T: three-core terminal block, 12 VDC ± 20%, 1.22 A, max. 14.6 W, 24 VAC ± 20%, 0.88 A, max. 13.7 W, PoE: IEEE 802.3at, Type 2, Class 4, 42.5 V to 57 V, 0.37 A to 0.28 A, max. 16.8 W, Without -1T: 12 VDC ± 20%, 1.28A, max. 15.3 W, 24 VAC ± 20%, 0.91 A, max. 13.7 W, PoE: IEEE 802.3at, Type 2, Class 4, 42.5 V to 57 V, 0.36 A to 0.27 A, max. 15.2 W
Material	Base: metal, cover: metal
Dimension	Ø144.3 mm × 114.1 mm (Ø5.7" × 4.5")
Package Dimension	244 mm × 174 mm × 173 mm (9.6" × 6.9" × 6.8")
Weight	Approx. 970 g (2.14 lb.)
With Package Weight	Approx. 1461 g (3.23 lb.)
Storage Conditions	-40 °C to 65 °C (-40 °F to 149 °F). Humidity 95% or less (non-condensing)
Startup and Operating Conditions	With -H: -40 °C to 65 °C (-40 °F to 149 °F). Humidity 95% or less (non-condensing), Without -H: -30 °C to 65 °C (-22 °F to 149 °F). Humidity 95% or less (non-condensing)
Language	33 languages: English, Russian, Estonian, Bulgarian, Hungarian, Greek, German, Italian, Czech, Slovak, French, Polish, Dutch, Portuguese, Spanish, Romanian, Danish, Swedish, Norwegian, Finnish, Croatian, Slovenian, Serbian, Turkish, Korean, Traditional Chinese, Thai, Vietnamese, Japanese, Latvian, Lithuanian, Portuguese (Brazil), Ukrainian
General Function	Heartbeat,one-key reset,mirror,password protection
Cable Length	0.25 m (0.8 ft.)
Heater	-H: Yes
Device Management	Supports adding alarm box (DS-FM2466) in the LAN to expand 6 additional input and 6 output alarm interfaces
Approval	
EMC	CE-EMC: EN 55032:2015+A1:2020, EN 50130-4:2011+A1:2014, EN IEC 61000-3-2:2019+A1:2021, EN 61000-3-3:2013+A1:2019+A2:2021, RCM: AS/NZS CISPR 32: 2015, IC: ICES-003: Issue 7, KC: KN32: 2015, KN35: 2015
Safety	CB: IEC 62368-1: 2014+A11, CE-LVD: EN 62368-1: 2014/A11: 2017, BIS: IS 13252 (Part 1): 2010/IEC 60950-1: 2005, LOA: IEC/EN 60950-1
Environment	CE-RoHS: 2011/65/EU, WEEE: 2012/19/EU, Reach: Regulation (EC) No 1907/2006
Protection	IP67: IEC 60529-2013,IK10: IEC 62262:2002
Anti-Corrosion Protection	-Y: NEMA 4X (NEMA 250-2018)
Automotive and Railway	EN50121-4

Other	PVC FREE

▪ Typical Application

Hikvision products are classified into three levels according to their anti-corrosion performance. Refer to the following description to choose for your using environment.

-Y model: This model has MODERATE PROTECTION.
Without -Y model: This model has NO SPECIFIC PROTECTION.

Level	Description
Top-level protection	Hikvision products at this level are equipped for use in areas where professional anti-corrosion protection is a must. Typical application scenarios include coastlines, docks, chemical plants, and more.
Moderate protection	Hikvision products at this level are equipped for use in areas with moderate anti-corrosion demands. Typical application scenarios include coastal areas about 2 kilometers (1.24 miles) away from coastlines, as well as areas affected by acid rain.
No specific protection	Hikvision products at this level are equipped for use in areas where no specific anti-corrosion protection is needed.

▪ Available Model

iDS-2CD7146G2-IZHSY(8-32mm)
iDS-2CD7146G2-IZHSY(2.8-12mm)
iDS-2CD7146G2-IZS(8-32mm)
iDS-2CD7146G2-IZS(2.8-12mm)
iDS-2CD7146G2-IZHSY(1T)(8-32mm)
iDS-2CD7146G2-IZHSY(1T)(2.8-12mm)
iDS-2CD7146G2-IZS(1T)(8-32mm)
iDS-2CD7146G2-IZS(1T)(2.8-12mm)

▪ Dimension

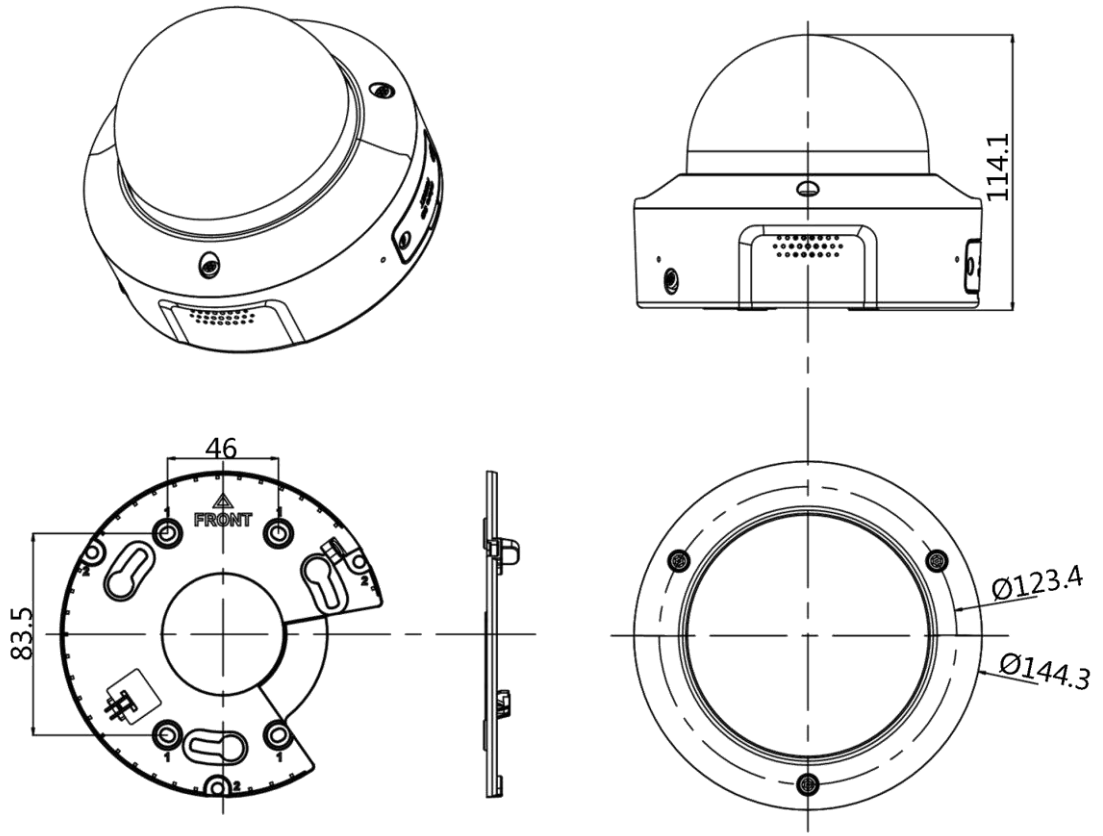

Unit: mm

▪ Accessory

▪ Optional

DS-1475ZJ-SUS Vertical pole mount	DS-1227ZJ-DM32 In-ceiling mount	DS-1476ZJ-SUS Corner mount	DS-1475ZJ-Y Vertical pole mount	DS-1476ZJ-Y Corner mount
				

DS-2280ZJ-WA140 Junction box	DS-2200ZJ-WA-140 Wall mount	DS-2200ZJ-WAJ-140 Wall mount	DS-2210ZJ-WA-140 Pendant Mount
			

Headquarters
No.555 Qianmo Road, Binjiang District,
Hangzhou 310051, China
T +86-571-8807-5998
www.hikvision.com

Follow us on social media to get the latest product and solution information.

Hikvision HikvisionHQ HikvisionHQ Hikvision_Global Hikvision Corporate Channel hikvisionhq

© Hangzhou Hikvision Digital Technology Co., Ltd. Unless otherwise agreed, Hikvision makes no warranties, express or implied. We reserve the right to introduce modifications without notice.