DS-2CD2723G2-IZS
2 MP AcuSense Motorized Varifocal Dome Network Camera

AcuSense





Empowered by deep learning algorithms, Hikvision AcuSense technology brings human and vehicle targets classification alarms to front- and back-end devices. The system focuses on human and vehicle targets, vastly improving alarm efficiency and effectiveness.

- High quality imaging with 2 MP resolution
- Motorized varifocal lens for easy installation and monitoring
- Clear imaging against strong backlight due to 120 dB WDR technology
- Efficient H.265+ compression technology
- Water and dust resistant (IP67) and vandal resistant (IK10)
- Focus on human and vehicle targets classification based on deep learning

▪ Specification

Camera	
Image Sensor	1/2.8” Progressive Scan CMOS
Min. Illumination	Color: 0.005 Lux @ (F1.6, AGC ON), 0 Lux with IR on
Shutter Speed	1/3 s to 1/100,000 s
Slow Shutter	Yes
P/N	P/N
Wide Dynamic Range	120 dB
Day & Night	ICR Cut
Angle Adjustment	Pan: 0° to 355°, tilt: 0° to 75°, rotate: 0° to 355°
Lens	
Lens Type & FOV	2.8 to 12 mm, horizontal FOV 106.6° to 31.7°, vertical FOV 54.7° to 17.7°, diagonal FOV 130.3° to 36.4°
Aperture	F1.6
Lens Mount	Ø14
DORI	
DORI	2.8 to 12 mm: D: 44.1 m to 137.9 m, O: 17.5 m to 54.7 m, R: 8.8 m to 27.5 m, I: 4.4 m to 13.8 m
Illuminator	
IR Range	Up to 40 m
Wavelength	850 nm
Video	
Max. Resolution	1920 × 1080
Main Stream	50Hz: 25 fps (1920 × 1080, 1280 × 720) 60Hz: 30 fps (1920 × 1080, 1280 × 720)
Sub Stream	50Hz: 25 fps (640 × 480, 640 × 360) 60Hz: 30 fps (640 × 480, 640 × 360)
Third Stream	50Hz: 25 fps (1280 × 720, 640 × 480, 640 × 360) 60Hz: 30 fps (1280 × 720, 640 × 480, 640 × 360)
Video Compression	Main stream: H.265/H.264/H.264+/H.265+ Sub-stream: H.265/H.264/MJPEG Third stream: H.265/H.264
Video Bit Rate	32 Kbps to 8 Mbps
H.264 Type	Baseline Profile/Main Profile/High Profile
H.265 Type	Main Profile
H.264+	Main Stream supports
H.265+	Main Stream supports
Bit Rate Control	CBR/VBR
Scalable Video Coding (SVC)	Yes
Region of Interest (ROI)	1 fixed region for main stream and sub-stream
Audio	
Environment Noise Filtering	Yes
Audio Sampling Rate	8 kHz/16 kHz/32 kHz/44.1 kHz/48 kHz
Audio Compression	G.711ulaw/G.711alaw/G.722.1/G.726/MP2L2/PCM/MP3/AAC

Audio Bit Rate	64Kbps(G.711ulaw/G.711alaw)/16Kbps(G.722.1)/16Kbps(G.726)/16Kbps-64Kbps(AAC)/32-192Kbps(MP2L2)/8-320Kbps(MP3)
Network	
Simultaneous Live View	Up to 6 channels
API	Open Network Video Interface (Profile S, Profile G), ISAPI, SDK
Protocols	TCP/IP, ICMP, HTTP, HTTPS, FTP, DHCP, DNS, DDNS, RTP, RTSP, NTP, UPnP, SMTP, IGMP, 802.1X, QoS, IPv6, UDP, Bonjour, SSL/TLS, PPPoE
User/Host	Up to 32 users. 3 user levels: administrator, operator and user
Security	Password protection, complicated password, HTTPS encryption, IP address filter, Security Audit Log, basic and digest authentication for HTTP/HTTPS, TLS 1.1/1.2, WSSE and digest authentication for Open Network Video Interface
Network Storage	MicroSD/SDHC/SDXC card (256 GB) local storage, and NAS(NFS, SMB/CIFS), auto network replenishment (ANR)
Client	iVMS-4200, Hik-Connect, Hik-Central
Web Browser	Plug-in required live view: IE 10, IE 11 Plug-in free live view : Chrome 57.0+, Firefox 52.0+ Local service: Chrome 57.0+, Firefox 52.0+
Image	
Day/Night Switch	Day, Night, Auto, Schedule
Image Enhancement	BLC, HLC, 3D DNR
Image Parameters Switch	Yes
Image Settings	Rotate, mirror, privacy masks, saturation, brightness, contrast, sharpness, gain, white balance adjustable by client software or web browser
Interface	
Audio	-S: 1 input (line in), max. input amplitude: 3.3 vpp, input impedance: 4.7 KΩ, interface type: non-equilibrium; 1 output (line out), max. output amplitude: 3.3 vpp, output impedance: 100 Ω, interface type: non-equilibrium
Alarm	-S: 1 input, 1 output (max. 12 VDC, 30 mA)
On-board Storage	Built-in micro SD, up to 256 GB
Hardware Reset	Yes
Communication Interface	1 RJ45 10M/100M self-adaptive Ethernet port
Event	
Basic Event	Motion detection (human and vehicle targets classification), video tampering alarm, exception
Face Detection	Yes
Deep Learning Function	
Perimeter Protection	Line crossing detection, intrusion detection Supports human and vehicle targets classification
General	
Linkage Method	Upload to FTP/memory card/NAS, notify surveillance center, trigger record, trigger capture, Email

Web Client Language	33 languages English, Russian, Estonian, Bulgarian, Hungarian, Greek, German, Italian, Czech, Slovak, French, Polish, Dutch, Portuguese, Spanish, Romanian, Danish, Swedish, Norwegian, Finnish, Croatian, Slovenian, Serbian, Turkish, Korean, Traditional Chinese, Thai, Vietnamese, Japanese, Latvian, Lithuanian, Portuguese (Brazil), Ukrainian
General Function	Anti-flicker, heartbeat, password reset via e-mail, pixel counter
Storage Conditions	-30 °C to 60 °C (-22 °F to 140 °F). Humidity 95% or less (non-condensing)
Startup and Operating Conditions	-30 °C to 60 °C (-22 °F to 140 °F). Humidity 95% or less (non-condensing)
Power Supply	12 VDC ± 25%, reverse polarity protection PoE: 802.3af, Class 3
Power Consumption and Current	12 VDC, 0.88 A, max. 10.5 W PoE: (802.3af, 36 V to 57 V), 0.35 A to 0.22 A, max. 12.5 W
Power Interface	Ø5.5 mm coaxial power plug
Material	Upper cover and base: metal Bubble: plastic
Camera Dimension	Ø153.3 × 111.6 mm (Ø6.1" × 4.4")
Package Dimension	244 × 174 × 173 mm (9.7" × 6.9" × 6.9")
Camera Weight	Approx. 880 g (1.9 lb.)
With Package Weight	Approx. 1419 g (3.1 lb.)
Approval	
EMC	FCC (47 CFR Part 15, Subpart B); CE-EMC (EN 55032: 2015, EN 61000-3-2: 2014, EN 61000-3-3: 2013, EN 50130-4: 2011 +A1: 2014); RCM (AS/NZS CISPR 32: 2015); IC (ICES-003: Issue 6, 2016); KC (KN 32: 2015, KN 35: 2015)
Safety	UL (UL 60950-1); CB (IEC 60950-1:2005 + Am 1:2009 + Am 2:2013); CE-LVD (EN 60950-1:2005 + Am 1:2009 + Am 2:2013); BIS (IS 13252(Part 1):2010+A1:2013+A2:2015)
Environment	CE-RoHS (2011/65/EU); WEEE (2012/19/EU); Reach (Regulation (EC) No 1907/2006)
Protection	IP67 (IEC 60529-2013), IK10 (IEC 62262:2002)

▪ Available Model

DS-2CD2723G2-IZS (2.8 to 12 mm)

▪ Dimension

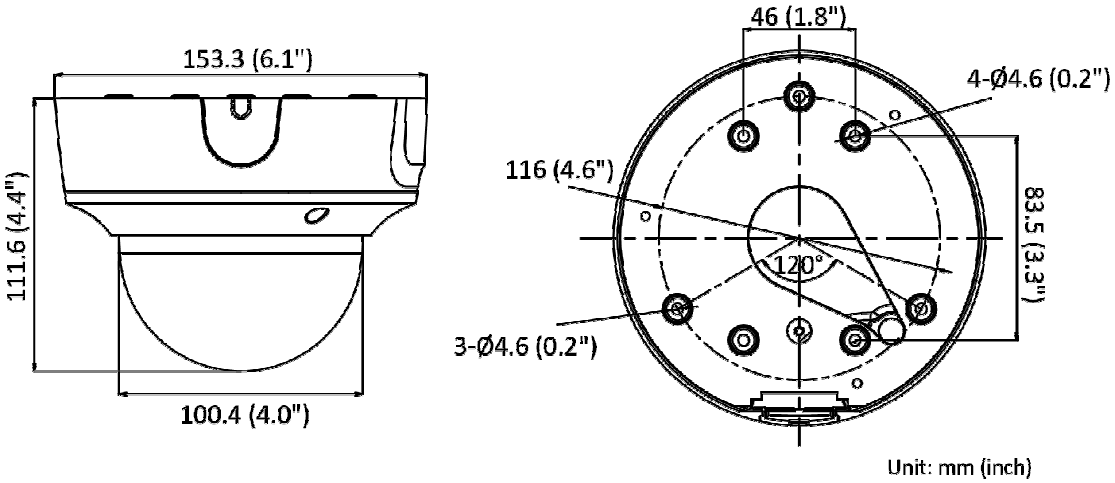

▪ Accessory

▪ Optional

DS-1280ZJ-DM55 Junction Box	DS-1473ZJ-155B Wall Mount	DS-1475ZJ-SUS Vertical Pole Mount	DS-1476ZJ-SUS Corner Mount	DS-1473ZJ-155 Wall Mount
		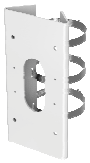		

DS-1227ZJ-DM44 Pendant Mount	DS-1471ZJ-155 Pendant Mount
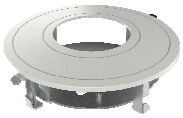	

Distributed by

Headquarters
No.555 Qianmo Road, Binjiang District,
Hangzhou 310051, China
T +86-571-8807-5998
overseasbusiness@hikvision.com

Hikvision USA
T +1-909-895-0400
sales.usa@hikvision.com

Hikvision Europe
T +31-23-5542770
sales.eu@hikvision.com

Hikvision UK & Ireland
T +01628-902140
sales.uk@hikvision.com

Hikvision UAE
T +971-4-4432090
salesme@hikvision.com

Hikvision Russia
T +7-495-669-67-99
saleru@hikvision.com

Hikvision Australia
T +61-2-8599-4233
salesau@hikvision.com

Hikvision Italy
T +39-0438-6902
info.it@hikvision.com

Hikvision South Africa
Tel: +27 (10) 0351172
sale.africa@hikvision.com

Hikvision Singapore
T +65-6684-4718
sg@hikvision.com

Hikvision Korea
T +82-(0)31-731-8817
sales.korea@hikvision.com

Hikvision India
T +91-22-28469900
sales@pramahikvision.com

Hikvision Brazil
T +55 11 3318-0050
Latam.support@hikvision.com

Hikvision France
T +33(0)1-85-330-450
info.fr@hikvision.com

Hikvision Spain
T +34-91-737-16-55
info.es@hikvision.com

Hikvision Poland
T +48-22-460-01-50
info.pl@hikvision.com

Hikvision Canada
T +1-866-200-6690
sales.canada@hikvision.com

Hikvision Turkey
T +90 (216)521 7070- 7074
sales.tr@hikvision.com

Hikvision Kazakhstan
T +7-727-9730667
nikia.panfilov@hikvision.ru

Hikvision Tashkent
T +99-87-1238-9438
uzb@hikvision.ru

Hikvision Indonesia
T +62-21-2933759
Sales.Indonesia@hikvision.com

Hikvision Thailand
T +662-275-9949
sales.thailand@hikvision.com

Hikvision Malaysia
T +601-7652-2413
sales.my@hikvision.com

Hikvision Vietnam
T +84-974270888
sales.vt@hikvision.com

Hikvision Hong Kong
T +852-2151-1761
info.hk@hikvision.com

Hikvision Colombia
sales.colombia@hikvision.com

© Hikvision Digital Technology Co., Ltd. 2020 | Data subject to change without notice |

050511320210413