DS-2CD2T83G2P-LISU/S(L)(RB)
8 MP Panoramic AcuSense Fixed Bullet Network Camera





- 180° Field of view
- High quality imaging with 8 MP resolution
- Support Person and Vehicle Detection
- Smart Hybrid Light: advanced technology with long range
- Efficient H.265+ compression technology
- Support on-board storage up to 512 GB (SD card slot)
- Provide real-time security via built-in two-way audio
- Water and dust resistant (IP67)
- Active strobe light and audio alarm to warn intruders off

▪ Specification

Camera	
Image Sensor	1/2.4" Progressive Scan CMOS
Max. Resolution	4256 × 1888
Min. Illumination	Color: 0.005 Lux @ (F1.6, AGC ON),0 Lux with light
Shutter Time	1 s to 1/100,000 s
Day & Night	IR cut filter
Angle Adjustment	Pan: 0° to 360°,tilt: 0° to 90°,rotate: 0° to 360°
Lens	
Lens Type	Fixed focal lens, 2 mm
Focal Length & FOV	2 mm, horizontal FOV 180°, vertical FOV 77°
Iris Type	Fixed
Lens Mount	M12
Aperture	F1.6
DORI	
DORI	2 mm, D: 50 m, O: 20 m, R: 10 m, I: 5 m
Illuminator	
Supplement Light Range	Up to 30 m
Smart Supplement Light	Yes
Supplement Light Type	IR,White Light
IR Wavelength	850 nm
Video	
Main Stream	50 Hz: 20 fps (4256 × 1888, 4096 × 1860) 60 Hz: 20 fps (4256 × 1888, 4096 × 1860)
Sub-Stream	50 Hz: 20 fps (1200×536, 960 × 432) 60 Hz: 20 fps (1200×536, 960 × 432)
H.265 Type	Main Profile
Video Compression	Main stream: H.265+/H.265/H.264+/H.264, Sub-stream: H.265/H.264/MJPEG
Video Bit Rate	32 Kbps to 16 Mbps
H.264 Type	Baseline Profile,Main Profile,High Profile
Bit Rate Control	CBR,VBR
Scalable Video Coding (SVC)	H.264 and H.265 encoding
Region of Interest (ROI)	1 fixed region for main stream
Audio	
Audio Sampling Rate	8 kHz/16 kHz
Audio Bit Rate	64 Kbps (G.711ulaw/G.711alaw)/16 Kbps (G.722.1)/16 Kbps (G.726)/32 to 160 Kbps (MP2L2)/16 to 64 Kbps (AAC-LC)
Audio Type	Mono sound
Environment Noise Filtering	Yes
Audio Compression	G.711/G.722.1/G.726/MP2L2/PCM/AAC-LC
Network	
Web Browser	Plug-in required live view: IE 11, Local service: Chrome 80+, Firefox 80+, Edge 89+
Client	iVMS-4200,Hik-Connect

Security	Password protection, complicated password, watermark, basic and digest authentication for HTTP, WSSE and digest authentication for Open Network Video Interface, security audit log, host authentication (MAC address)
Simultaneous Live View	Up to 6 channels
API	ONVIF (Profile S, Profile T, Profile G),ISAPI,SDK
Protocols	TCP/IP, ICMP, DHCP, DNS, HTTP, RTP, RTSP, RTCP, NTP, IGMP, IPv4, IPv6, UDP, QoS, FTP, SMTP, HTTPS, DDNS
User/Host	Up to 32 users 3 user levels: administrator, operator, and user
Image	
Day/Night Switch	Day,Night,Auto,Schedule
Image Enhancement	BLC,HLC,3D DNR
Wide Dynamic Range (WDR)	120 dB
SNR	≥ 52 dB
Image Settings	Rotate mode,saturation,brightness,contrast,sharpness,gain,white balance,adjustable by client software or web browser
Privacy Mask	4 programmable polygon privacy masks
Interface	
On-Board Storage	Built-in memory card slot, support microSD/microSDHC/microSDXC card, up to 512 GB
Built-in Microphone	Yes,1 built-in microphone
Built-in Speaker	Yes, 1 built-in speaker,Max. power consumption: 2 W, max. sound pressure level: 10 cm: 97 dB.
Ethernet Interface	1 RJ45 10 M/100 M self-adaptive Ethernet port
Audio	1 input (line in), max. input amplitude: 3.3 Vpp, input impedance:4.7 KΩ, interface type: non-equilibrium 1 output (line out), max.output amplitude: 3.3 Vpp, output impedance: 100 Ω, interface type: non-equilibrium
Alarm	1 input, 1 output (max. 12 VDC, 30 mA)
Reset Key	Yes
Event	
Smart Event	Line crossing detection, intrusion detection(support alarm triggering by specified target types (human and vehicle))
Basic Event	Motion detection (support alarm triggering by specified target types (human and vehicle)),video tampering alarm,exception
Linkage	Upload to FTP/memory card, notify surveillance center, send email, trigger recording, trigger capture, audible warning, strobe light flashing
General	
Power	12 VDC ± 25%, 0.83 A, max. 10 W,Ø5.5 mm coaxial power plug,reverse polarity protection, PoE: IEEE 802.3af, Class 3, max. 11.5 W
Material	Front cover: Metal , body: Metal, bracket: Metal
Dimension	103.6 mm × 76 mm × 241.9 mm (4.1" × 3.0" × 9.52")
Package Dimension	260 mm × 140 mm × 115 mm (10.2" × 5.5" × 4.5")
With Package Weight	Approx. 1260 g (2.8 lb.)
Weight	Approx. 940 g (2.1 lb.)
Storage Conditions	-30 °C to 60 °C (-22 °F to 140 °F). Humidity 95% or less (non-condensing)

Startup and Operating Conditions	-30 ℃ to 60 ℃ (-22 ℉ to 140 ℉). Humidity 95% or less (non-condensing)
Language	English, Turkish, Polish, Romanian, Czech, Slovak, Traditional Chinese, Thai, Vietnamese, Croatian, Slovenian, Serbian, Ukrainian
General Function	Heartbeat,anti-banding,password protection,password reset via email
Flashing Light	/SRB model: Red and Blue Light /SL model: White Light
Approval	
Protection	IP67:IEC 60529-2013
EMC	CE-EMC: EN 55032:2015+A1:2020, EN 50130-4:2011+A1:2014, EN IEC 61000-3-2:2019+A1:2021, EN 61000-3-3:2013+A1:2019+A2:2021
Safety	CB: IEC 62368-1:2014+A11, CE-LVD: EN 62368-1:2014/A11:2017
Environment	CE-RoHS: 2011/65/EU, WEEE: 2012/19/EU, Reach: Regulation (EC) No 1907/2006

▪ Typical Application

Recommended Scenarios: The Dual-lens panoramic camera is ideal for large-scale application Scenarios, such as parks, parking lots, intersections, roads, stadiums, and plantations.
Recommended installation height of the camera: above 3 m (9.84 ft.).

Recommended physical distance between the object and camera lens: 8 to 12 m (26.24 ft. to 39.37 ft.).

Recommended vertical angle of the camera lens: 68° to 75°.

▪ Available Model

DS-2CD2T83G2P-LISU/SL(180°)

DS-2CD2T83G2P-LISU/SRB(180°)

DS-2CD2T83G2P-LISU/SL(180°)/BLACK

DS-2CD2T83G2P-LISU/SRB(180°)/BLACK

▪ Dimension

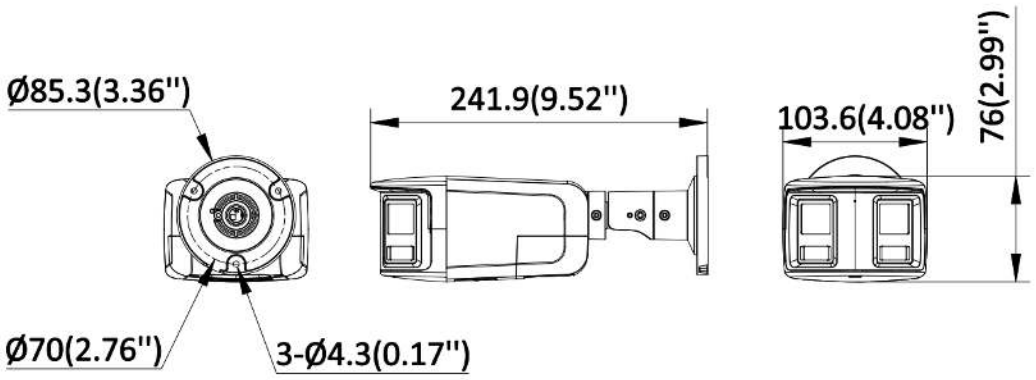

Unit: mm [inch]

▪ Accessory

▪ Optional

DS-1275ZJ-SUS	DS-1280ZJ-XS	DS-1276ZJ-SUS
		

▪ Installation Methods

Vertical Pole Mounting DS-1275ZJ-SUS+DS-1280ZJ-XS	Junction Box DS-1280ZJ-XS	Corner Mounting DS-1276ZJ-SUS+DS-1280ZJ-XS
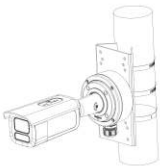		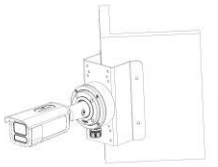

See Far, Go Further

www.hikvision.com
support@hikvision.com

© Hangzhou Hikvision Digital Technology Co., Ltd. Unless otherwise agreed, Hikvision makes no warranties, express or implied. We reserve the right to introduce modifications without notice.

HIKVISION®