HIKVISION

DS-2CD2T43G2-2LI(2U)/4LI(2U)

4 MP Acusense Smart Hybrid Light Fixed Bullet Network Camera

AcuSense





- High quality imaging with 4 MP resolution
- Acusense: Focus on human and vehicle classification based on deep learning
- Smart Hybrid Light: Integrates IR and White lights, 4 supplemental lighting modes
- -2U: Built-in arrayed dual-microphone for real-time high quality audio security
- Clear imaging against strong back light due to 120 dB true WDR technology
- Efficient H.265+ compression technology
- Water and dust resistant (IP67) and vandal-resistant (IK10)

▪ Specification

Camera	
Image Sensor	1/3" Progressive Scan CMOS
Max. Resolution	2688 × 1520
Min. Illumination	Color: 0.005 Lux @ (F1.6, AGC ON), 0 Lux with light
Shutter Time	1/3 s to 1/100,000 s
Day & Night	IR cut filter
Angle Adjustment	Pan: 0° to 360°, tilt: 0° to 90°, rotate: 0° to 360°
Lens	
Lens Type	Fixed focal lens, 2.8, 4, and 6 mm optional
Focal Length & FOV	2.8 mm, horizontal FOV 104°, vertical FOV 57°, diagonal FOV 122° 4 mm, horizontal FOV 84°, vertical FOV 45°, diagonal FOV 100° 6 mm, horizontal FOV 52°, vertical FOV 28°, diagonal FOV 61°
Lens Mount	M12
Iris Type	Fixed
Aperture	F1.6
Depth of Field	2.8 mm: 1.4 m to ∞ 4 mm: 1.5 m to ∞ 6 mm: 3.5 m to ∞
DORI	
DORI	2.8 mm, D: 63 m, O: 25 m, R: 12 m, I: 6 m 4 mm, D: 78 m, O: 31 m, R: 15 m, I: 7 m 6 mm, D: 128 m, O: 50 m, R: 25 m, I: 12 m
Illuminator	
Supplement Light Type	IR, White Light
Supplement Light Range	-2LI and -2LI2U models: up to 60 m -4LI and -4LI2U models up to 80 m
Smart Supplement Light	Yes
IR Wavelength	850 nm
Video	
Main Stream	50 Hz: 25 fps (2688 × 1520, 1920 × 1080, 1280 × 720) 60 Hz: 30 fps (2688 × 1520, 1920 × 1080, 1280 × 720)
Sub-Stream	50 Hz: 25 fps (1280 × 720, 640 × 480, 640 × 360) 60 Hz: 30 fps (1280 × 720, 640 × 480, 640 × 360)
Third Stream	50 Hz: 10 fps (1920 × 1080, 1280 × 720, 640 × 480, 640 × 360) 60 Hz: 10 fps (1920 × 1080, 1280 × 720, 640 × 480, 640 × 360) *Third stream is supported under certain settings.
Video Compression	Main stream: H.265/H.264/H.264+/H.265+, Sub-stream: H.265/H.264/MJPEG, Third stream: H.265/H.264, *Third stream is supported under certain settings.
Video Bit Rate	32 Kbps to 8 Mbps
H.264 Type	Baseline Profile, Main Profile, High Profile
H.265 Type	Main Profile

Scalable Video Coding (SVC)	H.264 and H.265 encoding
Bit Rate Control	CBR, VBR
Region of Interest (ROI)	1 fixed region for main stream and sub-stream
Target Cropping	Yes
Audio	
Audio Compression	-2LI2U and -4LI2U models: G.711/G.722.1/G.726/MP2L2/PCM/MP3/AAC-LC
Audio Bit Rate	-2LI2U and -4LI2U models: 64 Kbps (G.711ulaw/G.711alaw)/16 Kbps (G.722.1)/16 Kbps (G.726)/32 to 160 Kbps (MP2L2)/8 to 320 Kbps (MP3)/16 to 64 Kbps (AAC-LC)
Audio Sampling Rate	-2LI2U and -4LI2U models: 8 kHz/16 kHz/32 kHz/48 kHz
Environment Noise Filtering	-2LI2U and -4LI2U models: Yes
Network	
Protocols	TCP/IP, ICMP, HTTP, HTTPS, FTP, DHCP, DNS, DDNS, RTP, RTSP, RTCP, NTP, UPnP, SMTP, IGMP, 802.1X, QoS, IPv4, IPv6, UDP, Bonjour, SSL/TLS, PPPoE, SNMP, WebSocket, WebSockets
Simultaneous Live View	Up to 6 channels
API	ONVIF (Profile S, Profile G), ISAPI, SDK, ISUP
Security	Password protection, complicated password, HTTPS encryption, IP address filter, Security Audit Log, basic and digest authentication for HTTP/HTTPS, TLS 1.1/1.2/1.3, WSSE and digest authentication for Open Network Video Interface
User/Host	Up to 32 users 3 user levels: administrator, operator, and user
Client	iVMS-4200, Hik-Connect, Hik-Central
Network Storage	NAS (NFS, SMB/CIFS), Auto Network Replenishment (ANR), Together with high-end Hikvision memory card, memory card encryption and health detection are supported.
Web Browser	Plug-in required live view: IE 11, Plug-in free live view: Chrome 80+, Firefox 80+, Edge 89+, Safari 13+, Local service: Chrome 80+, Firefox 80+, Edge 89+, Safari 13+
Image	
Image Parameters Switch	Yes
Day/Night Switch	Day, Night, Auto, Schedule
Image Settings	Rotate mode
Wide Dynamic Range (WDR)	120 dB
SNR	≥ 52 dB
Image Enhancement	BLC, HLC, 3D DNR
Privacy Mask	8 programmable polygon privacy masks
Interface	
Ethernet Interface	1 RJ45 10 M/100 M self-adaptive Ethernet port
On-Board Storage	Built-in memory card slot, support microSD/microSDHC/microSDXC card, up to 512 GB
Reset Key	Yes
Audio	Built-in Microphone: -2U: Arrayed dual-microphone
Event	
Basic Event	Motion detection (support alarm triggering by specified target types (human and vehicle)), video tampering alarm, exception
Smart Event	Face detection

Linkage	Upload to FTP/NAS/memory card, notify surveillance center, send email, trigger recording, trigger capture
Deep Learning Function	
Perimeter Protection	Line crossing, intrusion Support alarm triggering by specified target types (human and vehicle)
General	
Power	-2LI and -2LI2U models: 12 VDC ± 25%, 0.58 A, max. 7 W, Ø5.5 mm coaxial power plug, reverse polarity protection, PoE: IEEE 802.3af, Class 3, max. 8.5 W -4LI and -4LI2U models: 12 VDC ± 25%, 0.83 A, max. 10 W, Ø5.5 mm coaxial power plug, reverse polarity protection, PoE: IEEE 802.3af, Class 3, max.11 W
Material	Metal
Dimension	88.7 mm × 93.1 mm × 286.7 mm (3.5" × 3.7" × 11.3")
Package Dimension	386 mm × 156 mm × 155 mm (15.2" × 6.1" × 6.1")
Weight	Approx. 1150 g (2.5 lb.)
With Package Weight	Approx. 1640 g (3.6 lb.)
Storage Conditions	-30 °C to 60 °C (-22 °F to 140 °F). Humidity 95% or less (non-condensing)
Startup and Operating Conditions	-30 °C to 60 °C (-22 °F to 140 °F). Humidity 95% or less (non-condensing)
Language	33 languages: English, Russian, Estonian, Bulgarian, Hungarian, Greek, German, Italian, Czech, Slovak, French, Polish, Dutch, Portuguese, Spanish, Romanian, Danish, Swedish, Norwegian, Finnish, Croatian, Slovenian, Serbian, Turkish, Korean, Traditional Chinese, Thai, Vietnamese, Japanese, Latvian, Lithuanian, Portuguese (Brazil), Ukrainian
General Function	Heartbeat, mirror, flash log, password reset via email, pixel counter, anti-banding
Approval	
EMC	CE-EMC: EN 55032:2015+A1:2020, EN 50130-4:2011+A1:2014, EN IEC 61000-3-2:2019+A1:2021, EN 61000-3-3:2013+A1:2019+A2:2021, RCM: AS/NZS CISPR 32: 2015, IC: ICES-003: Issue 7, KC: KN32: 2015, KN35: 2015
Safety	CB: IEC 62368-1:2014+A11, CE-LVD: EN 62368-1:2014/A11: 2017, BIS: IS 13252 (Part 1): 2010/IEC 60950-1:2005, LOA: IEC/EN 60950-1
Environment	CE-RoHS: 2011/65/EU, WEEE: 2012/19/EU, Reach: Regulation (EC) No 1907/2006
Protection	IP67: IEC 60529-2013

▪ Typical Application

Hikvision products are classified into three levels according to their anti-corrosion performance. Refer to the following description to choose for your using environment.

This model has NO SPECIFIC PROTECTION.

Level	Description
Top-level protection	Hikvision products at this level are equipped for use in areas where professional anti-corrosion protection is a must. Typical application scenarios include coastlines, docks, chemical plants, and more.
Moderate protection	Hikvision products at this level are equipped for use in areas with moderate anti-corrosion demands. Typical application scenarios include coastal areas about 2 kilometers (1.24 miles) away from coastlines, as well as areas affected by acid rain.
No specific protection	Hikvision products at this level are equipped for use in areas where no specific anti-corrosion protection is needed.

▪ Available Model

DS-2CD2T43G2-2LI(2.8mm)
DS-2CD2T43G2-2LI(4mm)
DS-2CD2T43G2-2LI(6mm)
DS-2CD2T43G2-2LI2U(2.8mm)
DS-2CD2T43G2-2LI2U(4mm)
DS-2CD2T43G2-2LI2U(6mm)
DS-2CD2T43G2-2LI2U(2.8mm)(BLACK)
DS-2CD2T43G2-4LI(2.8mm)
DS-2CD2T43G2-4LI(4mm)
DS-2CD2T43G2-4LI(6mm)
DS-2CD2T43G2-4LI2U(2.8mm)
DS-2CD2T43G2-4LI2U(4mm)
DS-2CD2T43G2-4LI2U(6mm)
DS-2CD2T43G2-4LI2U(2.8mm)(BLACK)
DS-2CD2T43G2-4LI2U(4mm)(BLACK)

▪ Dimension

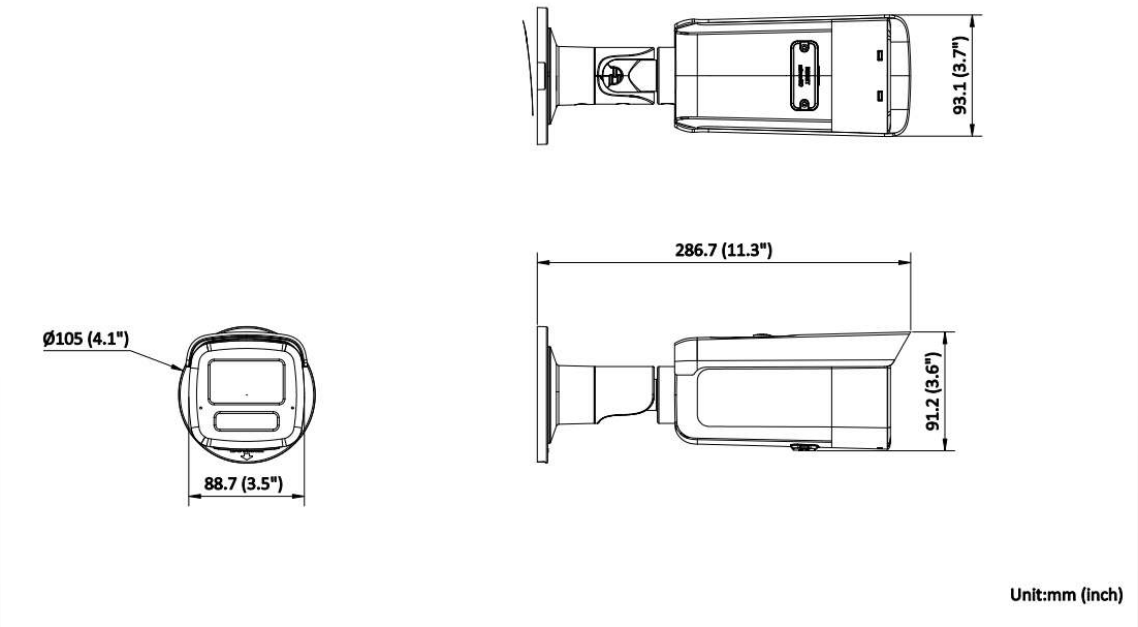

▪ Accessory

▪ Optional

DS-1275ZJ-S-SUS	DS-1275ZJ-SUS	DS-1260ZJ	DS-1276ZJ-SUS
			

▪ Installation Methods

Vertical Pole Mounting DS-1275ZJ-S-SUS	Vertical Pole Mounting DS-1275ZJ-SUS	Junction Box DS-1260ZJ	Corner Mounting DS-1276ZJ-SUS
		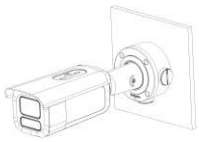	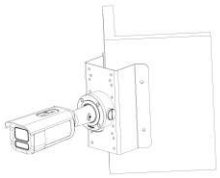

See Far, Go Further

www.hikvision.com
support@hikvision.com

© Hangzhou Hikvision Digital Technology Co., Ltd. Unless otherwise agreed, Hikvision makes no warranties, express or implied. We reserve the right to introduce modifications without notice.

HIKVISION®